TSP-2519

The Niña

HDPE inclusive toddler play system model The Niña

Recycled HDPE:

Steel:



Cognitive Development

Curiosity - Encouraging exploration and discovery through equipment providing new and unfamiliar experiences.

Physical Development

Sliding - Strengthening leg and arm muscles and improving coordination.

Ages 2-5 | Users 18 | Dimensions L: 10' W: 17'-8.7" H:13'-3.7" | L: 313 W: 554 H: 416 cm | Safety Zone 31'-9.0"/22'-8.1" | 968 / 691 cm | Fall Height 70" | 2'-2.9" cm | Extra accessibility

The Ni?a is an inclusive play boat, providing an accessible maritime experience for all ages and abilities.

The structure includes fun play panels, a rotating steering wheel for unforgettable adventures, a toddler slide, and a mast with a magnificent flag.

Perfect for developing imagination and motor skills in a safe and inviting environment.

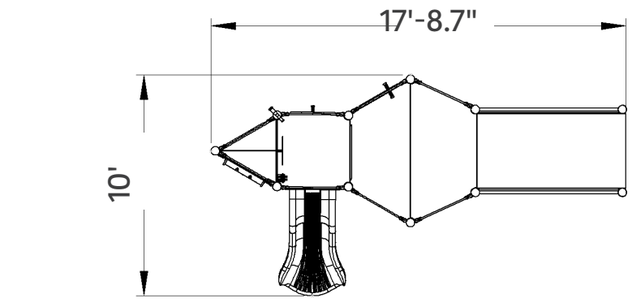

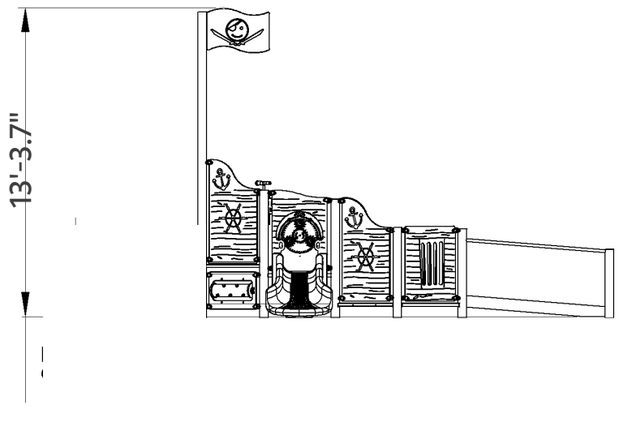

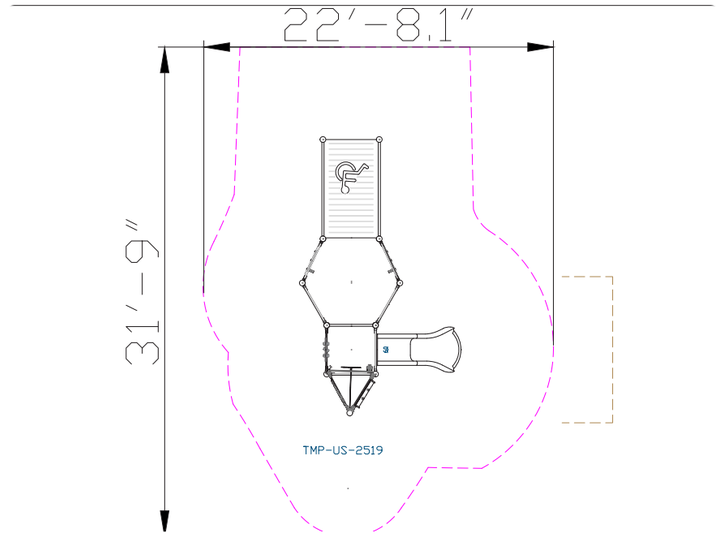





Recycled HDPE

HDPE (High-Density Polyethylene) is a recycled material made from high-density polyethylene, produced from recycled materials that allows for further recycling. It excels in resistance to UV rays and wear and tear, making it particularly suitable for use in outdoor playground equipment. Its touch is smooth and pleasant, and its appearance is maintained over time. The advantages include high resistance to harsh weather conditions and environmental preservation. The material is capable of absorbing high energy, which helps prevent fractures.



Steel

Steel structure that is strong and durable, oven-painted galvanized and coated with lead-free polyester powder for corrosion and rust resistance.

The steel meets strict EN 1176 standards, ensuring high quality and safety.

The steel is anti-vandalistic, requires minimal maintenance, and is fully recyclable.

The high-quality paint ensures weather resistance and maintains a new appearance over time.

Accessibility Platform



The accessibility platform is a structure that is accessible for children with disabilities, allowing them to participate in play equally and safely. It is an ideal addition to any structure and playground that requires accessibility standards.

Telescope



The telescope allows players to explore and observe their surroundings in an enjoyable way. Playing with the telescope encourages players to develop curiosity and interest in their environment. It is also suitable for imaginative play.

Steering Wheel



The steering wheel provides an interactive play experience that develops players' motor skills and coordination. Playing with the steering wheel encourages creativity and a sense of control, offering opportunities for imaginative play where players can pretend they are driving various vehicles.

Decorations and Accessories

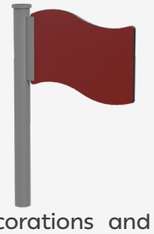

Decorations and accessories adorn the structures and highlight the theme of the playground. They encourage players to use their imagination and creativity during play.

Play Panel



The play panel provides a variety of interactive play options that develop players' motor and cognitive skills. Each panel offers a unique activity that stimulates thinking and encourages players to learn and discover more.

Rope Ladder



The rope ladder provides vertical access to the play structure and encourages players to develop physical skills such as strength, coordination, and balance. Climbing the rope ladder strengthens hand and leg muscles and develops a sense of balance. The ladder encourages players to face challenges and develop flexibility and agility.

Play Panel

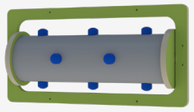

The play panel provides a variety of interactive play options that develop players' motor and cognitive skills. Each panel offers a unique activity that stimulates thinking and encourages players to learn and discover more.

Toddler Slide



The toddler slide provides a safe and enjoyable sliding experience for little ones. It develops coordination, movement, balance, and self-confidence for young players.