TSP-10248D

Juneau D

HDPE play system model Lynn

The Juneau D is a classic and popular play structure, especially suitable for educational institutions and early childhood. The structure includes a low slide, play and climbing levels, and additional elements that encourage experiential and safe play for young children. The bright and friendly design, along with an open and accessible space, allows children to develop basic physical skills such as balance, coordination, and strength, while having fun and playing. Juneau D is an ideal choice for kindergartens and play areas for early childhood.

Recycled HDPE:

Steel:

Rope Cables:

Balancing

Sliding

Climbing

Jumping







Ages 2-5

Users 19

Dimensions L: 11'-3.6" W: 20'-11.5" H: 11'-11.2" | L: 353 W: 655 H: 373 cm

Safety Zone 32'-6.5"/33'-5.9" | 991 / 1019 cm

Fall Height 3'-2.4" | 100 cm

Accessible

Emotional Development

Courage- Facing fears and new challenges. Confidence- Building self-confidence and belief in one's personal abilities. Independence- Developing independence and the ability to make personal decisions. Patience- Practicing patience and waiting for one's turn. Resilience- Coping with failure and trying again.

Social Development

Communication- Developing effective and clear communication skills with playmates Empathy- Developing empathy and the ability to understand and empathize with others' feelings. Friendship creation- Creating friendships and strengthening social bonds.

Physical Development

Climbing - Strengthening arm and leg muscles, developing fitness and endurance Sliding - Strengthening leg and arm muscles and improving coordination. Jumping- Improving leg strength and balance. Balancing- Improving balance and posture.

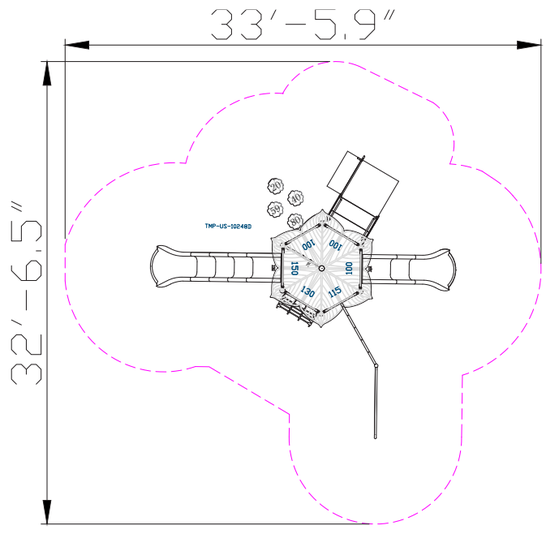



Recycled HDPE

HDPE (High-Density Polyethylene) is a recycled material made from high-density polyethylene, produced from recycled materials that allows for further recycling. It excels in resistance to UV rays and wear and tear, making it particularly suitable for use in outdoor playground equipment. Its touch is smooth and pleasant, and its appearance is maintained over time. The advantages include high resistance to harsh weather conditions and environmental preservation. The material is capable of absorbing high energy, which helps prevent fractures.



Rope Cables

Rope Cables are made of synthetic polypropylene (PP) fibers combined with a galvanized steel core for improved strength and durability. They meet strict standards, such as ASTM A240 and EN 10088, ensuring durability and safety for use in playground equipment. . The cables offer a soft and pleasant touch that does not harm the hands during use and are available in various diameters and colors, allowing for creative and aesthetic design.



Steel

Steel structure that is strong and durable, oven-painted galvanized and coated with lead-free polyester powder for corrosion and rust resistance.

The steel meets strict EN 1176 standards, ensuring high quality and safety.

The steel is anti-vandalistic, requires minimal maintenance, and is fully recyclable.

The high-quality paint ensures weather resistance and maintains a new appearance over time.

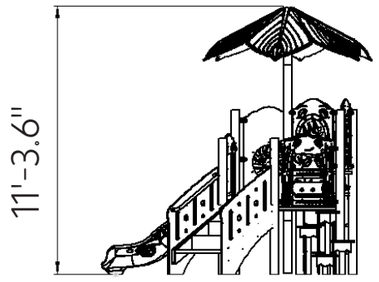

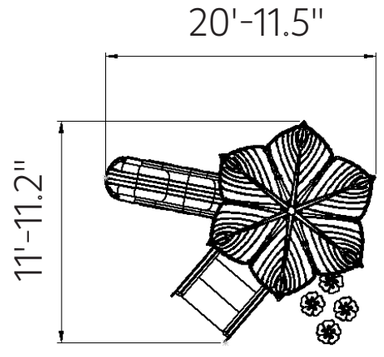



Designed Roof

The designed roof adds an aesthetic and interesting element to the play structure, providing shade and protection from the sun and rain. In addition to its functional role, the designed roof integrates with the story the play structure tells, enhancing the play experience. The roof design adds a dimension of imagination and creativity, allowing players to experience the structure as a magical and fascinating place, enhancing their enjoyment of the play.



Kalani Stepping Stones

Kalani stepping stones provide safe and pleasant surfaces for climbing and playing. Players develop physical skills such as strength, coordination, and balance while walking on the stones. The stepping stones encourage players to explore their environment and build self-confidence and independence as they enjoy the sense of achievement with every step.



Toddler Slide

The toddler slide provides a safe and enjoyable sliding experience for little ones. It develops coordination, movement, balance, and self-confidence for young players.



Rope Ladder

The rope ladder provides vertical access to the play structure and encourages players to develop physical skills such as strength, coordination, and balance. Climbing the rope ladder strengthens hand and leg muscles and develops a sense of balance. The ladder encourages players to face challenges and develop flexibility and agility.

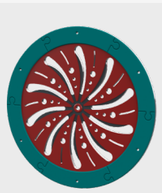

Play Panel

The play panel provides a variety of interactive play options that develop players' motor and cognitive skills. Each panel offers a unique activity that stimulates thinking and encourages players to learn and discover more.



Designed Panel

The play panel provides a variety of interactive play options that develop players' motor and cognitive skills. Each panel offers a unique activity that stimulates thinking and encourages players to learn and discover more.

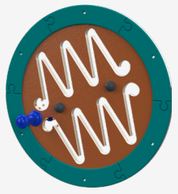

Play Panel

The play panel provides a variety of interactive play options that develop players' motor and cognitive skills. Each panel offers a unique activity that stimulates thinking and encourages players to learn and discover more.



Accessible Stairs

The high-durability stairs provide easy and safe access to the play structure, with a non-slip surface to prevent falls. Climbing and descending the stairs help players develop physical skills such as strength, coordination, and balance. The stairs also encourage independence and self-confidence as players learn to navigate heights and new tasks. Suitable for transfer accessibility to ensure convenient and safe access for players with disabilities, including smooth transitions from a wheelchair to the play structure and back.