TSP-10280BHD

Lansing B

HDPE play system model Lansing B

Recycled HDPE:

Steel:

Sliding Crawling Rotation Climbing Jumping



Ages 5-12 | Users 33 | Dimensions L: 25'-4.5" W: 22'-8.6" H:18'-6.7" | L: 793 W: 710 H: 580 cm | Safety Zone 39'-8.2"/36'-0.7" | 1209/ 1097 cm | Fall Height 9'-3.4" | 290 cm | Accessible

The Lansing B is a play system composed of two towers of different heights, connected by a climbing tunnel and incorporating curved slides and open slides.

The structure is specially designed to offer children a challenging and enjoyable play experience including elements of climbing, sliding, and social interaction.

The taller tower includes a twisted tube slide providing an exciting sliding experience, while the lower tower is equipped with a slide suitable for younger children.

The structure is suitable for a wide range of ages and encourages children to develop physical skills and coordination through experiential play.

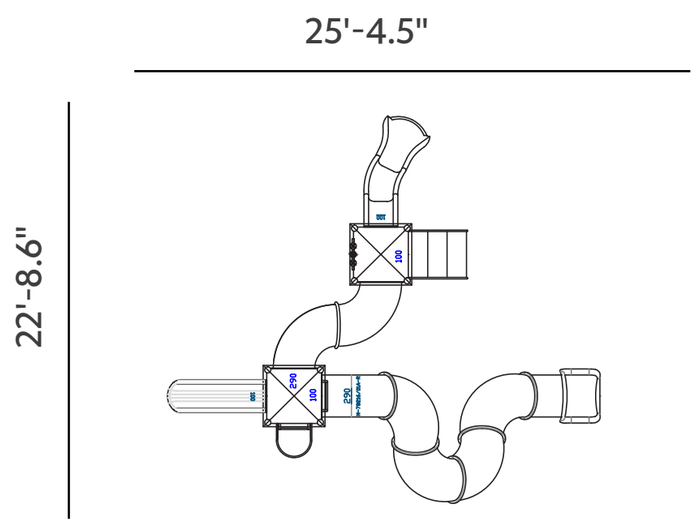

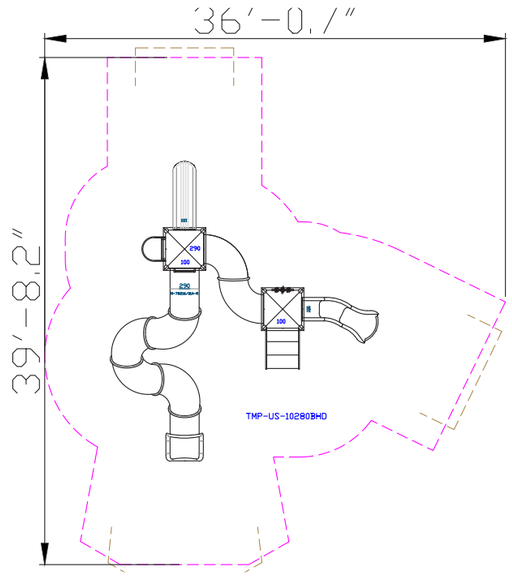





Recycled HDPE

HDPE (High-Density Polyethylene) is a recycled material made from high-density polyethylene, produced from recycled materials that allows for further recycling. It excels in resistance to UV rays and wear and tear, making it particularly suitable for use in outdoor playground equipment. Its touch is smooth and pleasant, and its appearance is maintained over time. The advantages include high resistance to harsh weather conditions and environmental preservation. The material is capable of absorbing high energy, which helps prevent fractures.



Steel

Steel structure that is strong and durable, oven-painted galvanized and coated with lead-free polyester powder for corrosion and rust resistance.

The steel meets strict EN 1176 standards, ensuring high quality and safety.

The steel is anti-vandalistic, requires minimal maintenance, and is fully recyclable.

The high-quality paint ensures weather resistance and maintains a new appearance over time.

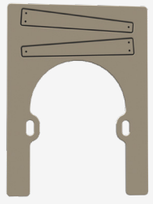

Designed Panel

The designed panel adds an aesthetic and unique dimension to the playground equipment, enhancing the overall play experience. The panel allows players to feel part of a creative and imaginative world, designed to align with the narrative of the playground. The design ensures easy and safe access to play activities, while maintaining a sense of security and enjoyment.



Crawl Tunnel

The crawl tunnel offers a physical challenge that develops players' motor skills, coordination, and balance. Players crawl through the tunnel and enjoy the sense of wonder and excitement as they enter from one side and exit from the other. Playing in the tunnel encourages exploration, daring, and self-confidence while maintaining a safe and enjoyable environment.



Barrel Slide

The barrel slide provides an exciting and challenging sliding experience, combining movement with a sense of adventure. Sliding in this slide develops players' motor skills and coordination as they move through the tube at varying speeds. The sliding action boosts self-confidence and encourages daring as players face the challenge of fast movement. The slide is a fundamental and important element in any playground and is considered one of the leading and most beloved attractions for players of all ages.



Fall Guard

The fall guard provides additional protection in areas where there is a risk of climbing and falling.



Toddler Slide

The toddler slide provides a safe and enjoyable sliding experience for little ones. It develops coordination, movement, balance, and self-confidence for young players.



Clear Bubble

The clear bubble offers a unique vantage point, allowing players to see their surroundings from a different perspective, maintaining eye contact between the companion and the player and ensuring continuous, safe communication. The clear bubble enhances the sense of security for players and companions, especially in cases of young children needing support and supervision during play.



Accessible Stairs

The high-durability stairs provide easy and safe access to the play structure, with a non-slip surface to prevent falls. Climbing and descending the stairs help players develop physical skills such as strength, coordination, and balance. The stairs also encourage independence and self-confidence as players learn to navigate heights and new tasks. Suitable for transfer accessibility to ensure convenient and safe access for players with disabilities, including smooth transitions from a wheelchair to the play structure and back.

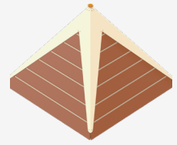

Roof

The roof provides shade and protection from the sun and rain, allowing players to enjoy play in comfortable conditions. In addition to its functional role, the roof is designed to enhance the look of the structure and align with the story told by the design of the play structure. The roof design contributes to creating an engaging and unique play environment that stimulates imagination and enriches the players' play experience.



Motor Development

Hand-eye coordination - Developing coordination and precision in activities requiring fine motor skills. Foot-eye coordination - Improving coordination and balance through various equipment.

Cognitive Development

Curiosity - Encouraging exploration and discovery through equipment providing new and unfamiliar experiences. Creativity- Developing creative thinking and imagination in open and interactive play. Exposure to diverse material - Learning about different materials and textures.

Emotional Development

Confidence- Building self-confidence and belief in one's personal abilities. Independence- Developing independence and the ability to make personal decisions. Patience- Practicing patience and waiting for one's turn.

Social Development

Communication- Developing effective and clear communication skills with playmates. Friendship creation- Creating friendships and strengthening social bonds. 7. Respect for boundaries- Learning the importance of respecting personal and social boundaries.

Physical Development

Climbing - Strengthening arm and leg muscles, developing fitness and endurance Sliding - Strengthening leg and arm muscles and improving coordination.