TSP-10610

Lexington

Extreme stainless steel play system model Lexington

Recycled HDPE:

Stainless Steel 316:

Balancing

Rotation

Climbing

Sliding

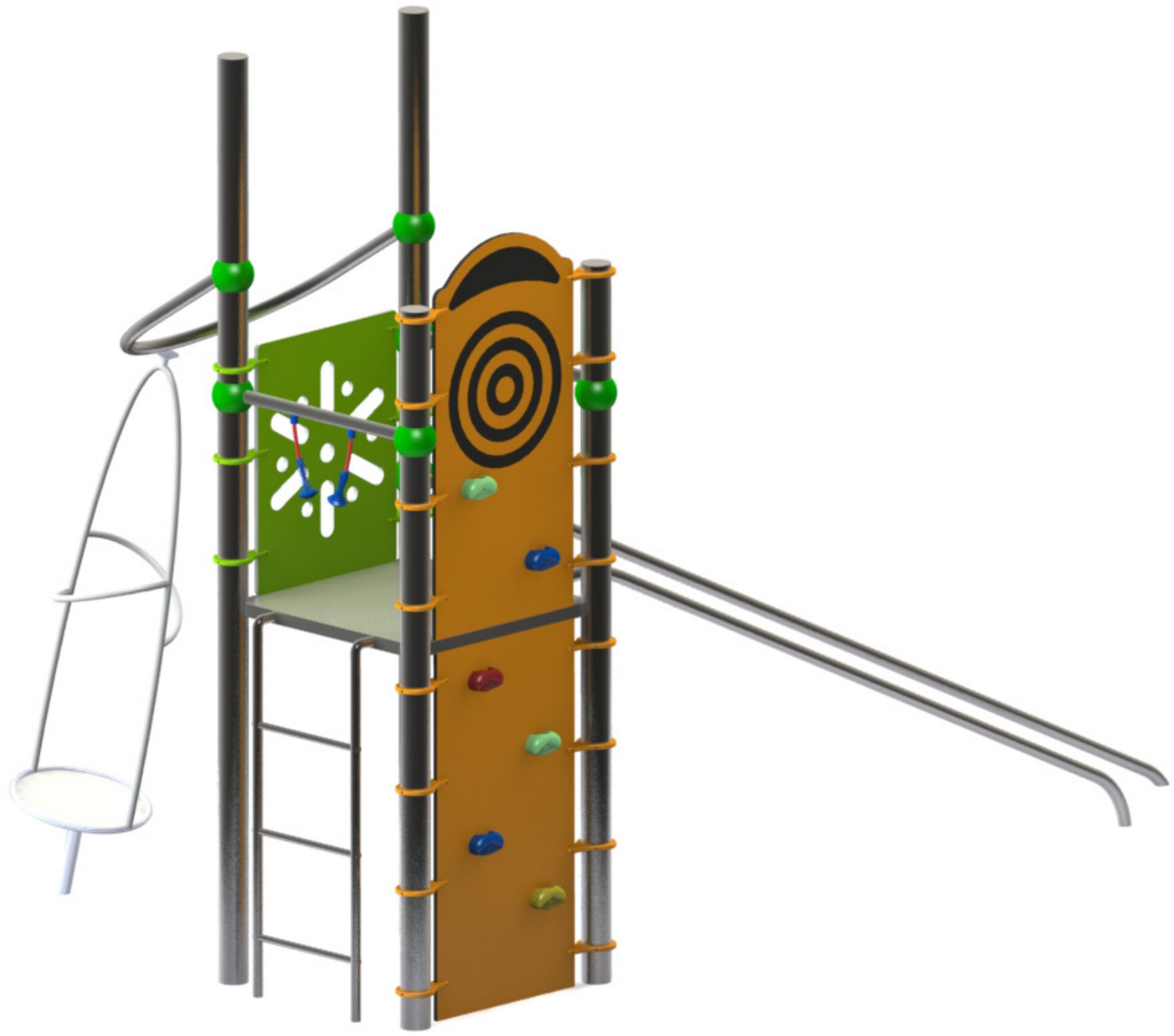

Ages 5-12

Users 12

Dimensions L: 8'-4.6" W: 14'-10.9" H: 11'-6.2" | L: 262 W : 466 H: 360 cm

Safety Zone 20'-4.8"/27'-5.9" | 620 / 836 cm

Fall Height 5'-9.1" | 180 cm

The Lexington is a challenging structure made of stainless steel and HDPE.

The Lexington structure has one tower, and the surface can be reached via a ladder, climbing wall, or slides that also serve for descent.

A large metal spinner is attached to the side of the structure for spinning play.

Suitable for climbing and challenge games, spinning, and sliding.

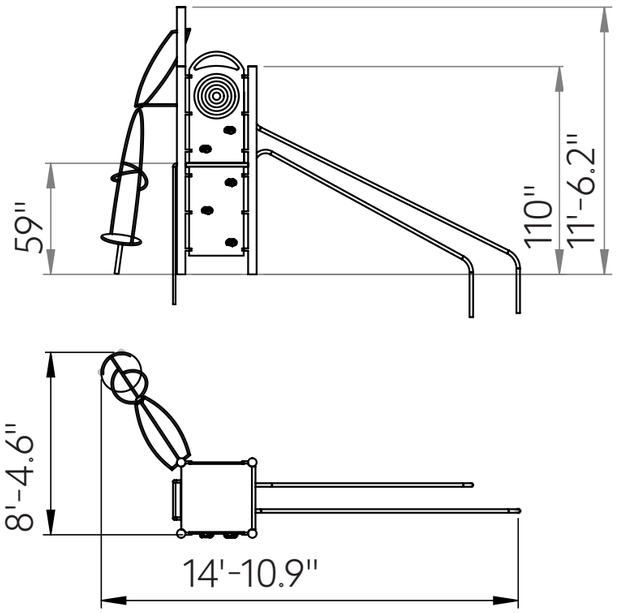

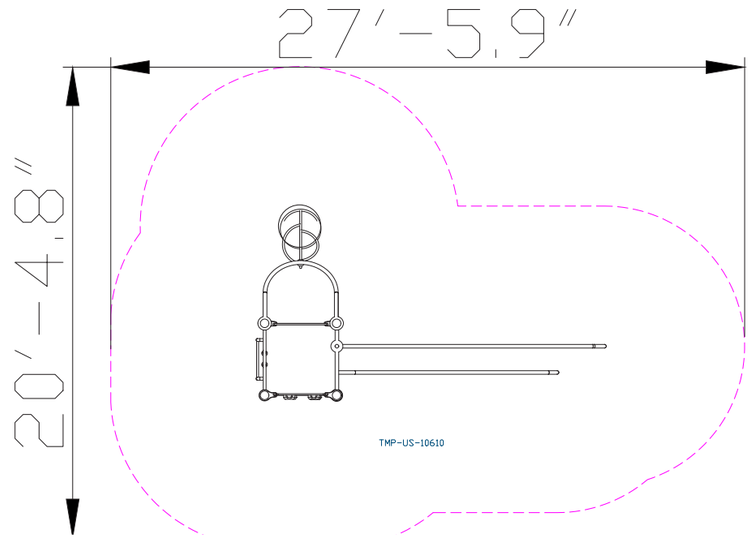





Recycled HDPE

HDPE (High-Density Polyethylene) is a recycled material made from high-density polyethylene, produced from recycled materials that allows for further recycling. It excels in resistance to UV rays and wear and tear, making it particularly suitable for use in outdoor playground equipment. Its touch is smooth and pleasant, and its appearance is maintained over time. The advantages include high resistance to harsh weather conditions and environmental preservation. The material is capable of absorbing high energy, which helps prevent fractures.



Stainless Steel 316

Stainless Steel 316 is an alloy of iron, chromium, nickel, and molybdenum, providing exceptional resistance to corrosion, rust, and stains. It meets strict playground equipment standards such as ASTM A240 and EN 10088, offering a smooth touch and shiny appearance. Particularly suitable for use in coastal and humid areas, and industrial and urban environments. Even in these challenging areas, Stainless Steel 316 maintains a clean and shiny appearance over time.Steel 316 maintains a clean and shiny appearance over time.



Slide Boards

The slide boards provide an exciting sliding experience that combines fast movement and fun, and they also offer a challenging climbing option that develops players' motor skills and balance. Playing on the slide boards encourages players to take risks and improve their body control skills.



Climbing Wall

The climbing wall offers a physical challenge that develops the muscle strength, coordination and weight of the players. Climbing the wall improves their problem solving. This is a place where players overcome fears and develop courage and self-confidence.



Spinning Top

The spinning top offers an exciting and challenging spinning experience that develops players' motor skills and balance. Playing with the spinning top encourages movement, coordination, and self-confidence.



Ladder

The ladder provides vertical access to the play structure and encourages players to develop physical skills such as strength, coordination, and balance. Climbing the ladder promotes courage and independence as players face heights and new challenges. The ladder strengthens hand and arm muscles and encourages proper body use.



Engravings

Engravings add designs and illustrations to parts of the structure, enriching the play experience with an interesting visual element.



Hand and Foot Holds

Hand and foot holds provide support during play and use of the structure. Players develop their strength and coordination while maintaining stability and security.



Motor Development

Foot-eye coordination - Improving coordination and balance through various equipment. Hand-eye coordination - Developing coordination and precision in activities requiring fine motor skills.



Physical Development

Climbing - Strengthening arm and leg muscles, developing fitness and endurance Balancing- Improving balance and posture.



Cognitive Development

Concentration- Developing the ability to focus and maintain attention in equipment requiring concentration.