TSP-10620

New Orleans

Extreme play system model New Orleans

Recycled HDPE:

Steel:

Rope Cables:

Balancing

Climbing

Jumping

Hanging

Sliding



Ages 2-5

Users 30

Dimensions L: 21'-9.1" W: 30'-11.7" H: 13'-9.9" | L: 680 W: 968 H: 432 cm

Safety Zone 43'-9.1"/34' | 1334 / 1036 cm

Fall Height 5'-1.4" | 160 cm

Accessible

The New Orleans play system is a combined and designed structure, composed of three towers with different shapes.

The towers are connected by unique bridges that combine moving panels and designed elements from HDPE, alongside cable nets and climbing elements.

The structure includes slides at different heights, accessible stairs, and various play panels.

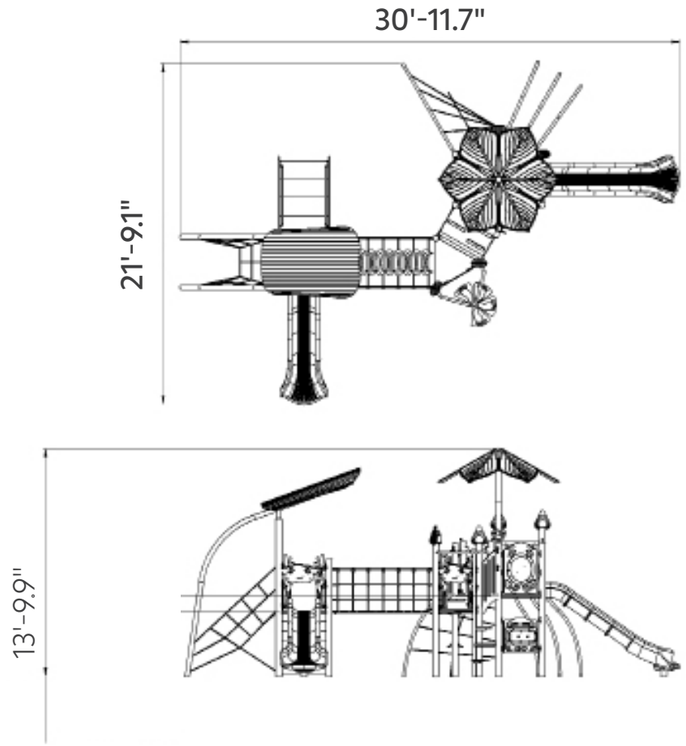

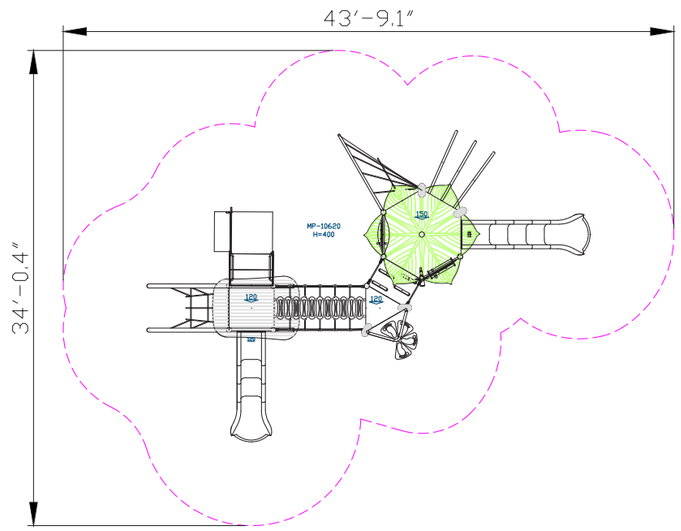





Recycled HDPE

HDPE (High-Density Polyethylene) is a recycled material made from high-density polyethylene, produced from recycled materials that allows for further recycling. It excels in resistance to UV rays and wear and tear, making it particularly suitable for use in outdoor playground equipment. Its touch is smooth and pleasant, and its appearance is maintained over time. The advantages include high resistance to harsh weather conditions and environmental preservation. The material is capable of absorbing high energy, which helps prevent fractures.



Rope Cables

Rope Cables are made of synthetic polypropylene (PP) fibers combined with a galvanized steel core for improved strength and durability. They meet strict standards, such as ASTM A240 and EN 10088, ensuring durability and safety for use in playground equipment. . The cables offer a soft and pleasant touch that does not harm the hands during use and are available in various diameters and colors, allowing for creative and aesthetic design.



Steel

Steel structure that is strong and durable, oven-painted galvanized and coated with lead-free polyester powder for corrosion and rust resistance.

The steel meets strict EN 1176 standards, ensuring high quality and safety.

The steel is anti-vandalistic, requires minimal maintenance, and is fully recyclable. The high-quality paint ensures weather resistance and maintains a new appearance over time.

Stepping Bridge

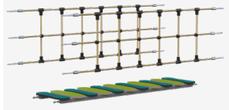

The stepping bridge provides a safe and convenient passage between parts of the structure, developing players' motor skills and balance. Playing on the bridge encourages movement and a sense of achievement.

Slide Boards



The slide boards provide an exciting sliding experience that combines fast movement and fun, and they also offer a challenging climbing option that develops players' motor skills and balance. Playing on the slide boards encourages players to take risks and improve their body control skills.

Rope Climbi

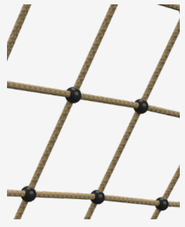

The rope climbing net offers a complex challenge that develops players' muscle strength, coordination, and balance. Climbing the net requires planning and forward thinking, encouraging players to overcome obstacles and develop problem-solving skills. The net allows players to experie

Roof



The roof provides shade and protection from the sun and rain, allowing players to enjoy play in comfortable conditions. In addition to its functional role, the roof is designed to enhance the look of the structure and align with the story told by the design of the play structure. The roof design contributes to creating an engaging and unique play environment that stimulates imagination and enriches the players' play experience.

Telescope



The telescope allows players to explore and observe their surroundings in an enjoyable way. Playing with the telescope encourages players to develop curiosity and interest in their environment. It is also suitable for imaginative play.

Moving Platform



The moving platform provides a dynamic movement experience that develops players' motor skills and coordination. Playing on the moving platform encourages stability and self-confidence while moving.

Slide



A slide is a fundamental and important element in any playground, considered one of the leading and most beloved attractions for players of all ages. The slide provides an enjoyable and exciting sliding experience that develops players' motor skills and coordination. Playing on the slide encourages movement, daring, and self-confidence.

Designed Climbing Element



The designed climbing element combines physical challenge with a unique and inviting design. Players develop physical skills such as strength, coordination, and balance while playing in a creative and designed environment. The unique design encourages players to play and explore, fostering their imagination and creativity.





Motor Development

Core muscle strengthening- Strengthening abdominal and back muscles through challenging equipment. Foot-eye coordination - Improving coordination and balance through various equipment. Hand-eye coordination - Developing coordination and precision in activities requiring fine motor skills.

Cognitive Development

Spatial awareness- Improving the ability to understand and navigate space through mazes and courses.. Curiosity - Encouraging exploration and discovery through equipment providing new and unfamiliar experiences.

Emotional Development

Courage- Facing fears and new challenges. Confidence- Building self-confidence and belief in one's personal abilities. Independence- Developing independence and the ability to make personal decisions. Patience- Practicing patience and waiting for one's turn. Resilience- Coping with failure and trying again.

Social Development

Communication- Developing effective and clear communication skills with playmates Empathy- Developing empathy and the ability to understand and empathize with others' feelings. Friendship creation- Creating friendships and strengthening social bonds.

Physical Development

Climbing - Strengthening arm and leg muscles, developing fitness and endurance Balancing- Improving balance and posture. Sliding - Strengthening leg and arm muscles and improving coordination. Jumping- Improving leg strength and balance. Hanging - Strengthening arm, back, and shoulder muscles.