TSP-10621

Chicago

HDPE play system model Chicago

Recycled HDPE:

Steel:

Hanging Sliding Rotation Crawling Jumping Climbing



Ages 5-12 | Users 68 | Dimensions L: 19'-4.3" W: 33'-3.4" H:17'-11" | L: 605 W: 1040 H: 560 cm | Safety Zone 48'-0.2"/29'-8.8" | 1463/ 904 cm | Fall Height 9'-3.4" | 290 cm | Accessible

The heart of the playground is a central play system that combines multiple climbing, play, and sliding elements and can accomodate a large number of players simultaneously.

The Chicago play system encourages imagination development games, physical development, social intelligence development, curiosity and exploration, independence, spatial orientation, stage planning, and proper organization.

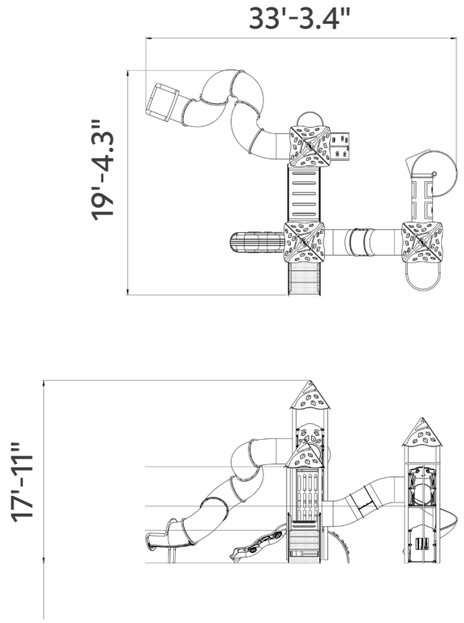

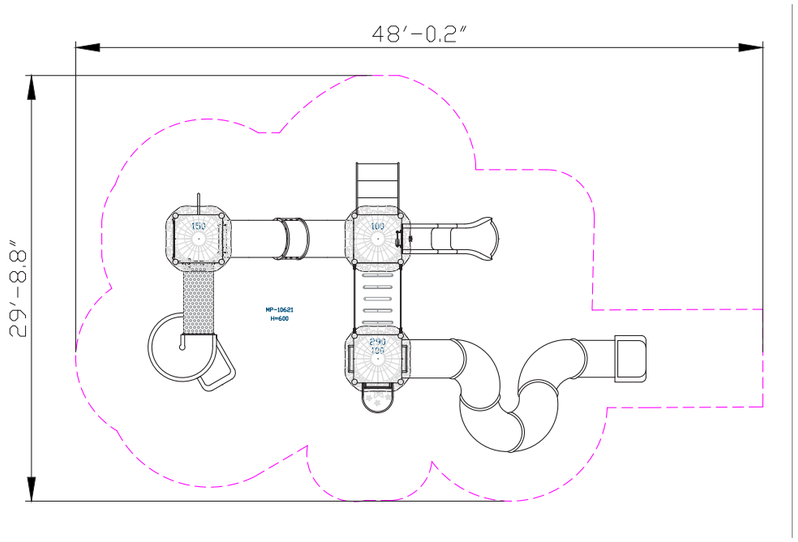





Recycled HDPE

HDPE (High-Density Polyethylene) is a recycled material made from high-density polyethylene, produced from recycled materials that allows for further recycling. It excels in resistance to UV rays and wear and tear, making it particularly suitable for use in outdoor playground equipment. Its touch is smooth and pleasant, and its appearance is maintained over time. The advantages include high resistance to harsh weather conditions and environmental preservation. The material is capable of absorbing high energy, which helps prevent fractures.



Steel

Steel structure that is strong and durable, oven-painted galvanized and coated with lead-free polyester powder for corrosion and rust resistance.

The steel meets strict EN 1176 standards, ensuring high quality and safety.

The steel is anti-vandalistic, requires minimal maintenance, and is fully recyclable.

The high-quality paint ensures weather resistance and maintains a new appearance over time.



Sliding Pole

The sliding pole allows for a quick and safe descent from the play structure, providing a fun and thrilling play experience. Young players can feel like firefighters in action. Using the pole strengthens hand and upper body muscles. Players learn to control the speed and direction of their descent, contributing to the development of control skills and self-confidence.

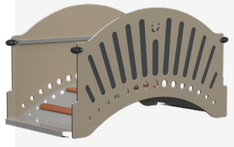

Open Bridge

The open bridge allows safe and convenient passage between parts of the structure, developing players' motor skills and balance. The height dimension from the ground adds a sense of excitement and adventure as players practice maintaining stability and confidence while crossing the bridge. Playing on the bridge encourages movement and self-confidence.



Crawl Tunnel

The crawl tunnel offers a physical challenge that develops players' motor skills, coordination, and balance. Players crawl through the tunnel and enjoy the sense of wonder and excitement as they enter from one side and exit from the other. Playing in the tunnel encourages exploration, daring, and self-confidence while maintaining a safe and enjoyable environment.

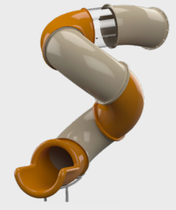

Transparent Slide Sections

The barrel slide provides an exciting and challenging sliding experience, combining movement with a sense of adventure. Sliding in this slide develops players' motor skills and coordination as they move through the tube at varying speeds. The sliding action boosts self-confidence and encourages daring as players face the challenge of fast movement. The slide is a fundamental and important element in any playground and is considered one of the leading and most beloved attractions for players of all ages.



Slide

The stepping bridge provides a safe and convenient passage between parts of the structure, developing players' motor skills and balance. Playing on the bridge encourages movement and a sense of achievement.

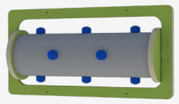

Play Panel

The play panel provides a variety of interactive play options that develop players' motor and cognitive skills. Each panel offers a unique activity that stimulates thinking and encourages players to learn and discover more.

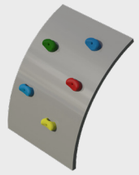

Climbing Element

The climbing element offers a physical challenge that develops muscle strength, coordination, and balance. Climbing on the element encourages children to overcome fears and build self-confidence and perseverance. Additionally, the element helps develop problem-solving skills as children look for efficient and safe ways to climb.



Designed Panel

The designed panel adds an aesthetic and unique dimension to the playground equipment, enhancing the overall play experience. The panel allows players to feel part of a creative and imaginative world, designed to align with the narrative of the playground. The design ensures easy and safe access to play activities, while maintaining a sense of security and enjoyment.





Emotional Development

Imagination- Encouraging imagination and creating play worlds. **Independence**- Developing independence and the ability to make personal decisions. **Empathy**- Developing the ability to understand and accept differences and complexities.

Social Development

Communication- Developing effective and clear communication skills with. **Friendship creation**- Creating friendships and strengthening social bonds.

Physical Development

Climbing - Strengthening arm and leg muscles, developing fitness and endurance. **Sliding** - Strengthening leg and arm muscles and improving coordination.

Motor Development

Hand-eye coordination - Developing coordination and precision in activities requiring fine motor skills. **Foot-eye coordination** - Improving coordination and balance through various equipment.

Cognitive Development

Spatial awareness- Improving the ability to understand and navigate space through mazes and courses. **Curiosity** - Encouraging exploration and discovery through equipment providing new and unfamiliar experiences. **Creativity**- Developing creative thinking and imagination in open and interactive play.