TSP-10623

Augusta

HDPE play system model Augusta

Recycled HDPE:

Steel:

Sliding Crawling Jumping Climbing



Ages 5-12 | Users 66 | Dimensions L: 23'-9.3" W: 16'-4.2" H:14'-2.9" | L: 743 W: 511 H: 445 cm | Safety Zone 28'-3.1"/38'-5.9" | 861 / 1171 cm | Fall Heigh 8' |250 cm | Accessible

The heart of the playground is a central play system that combines multiple climbing, play, and sliding elements and can accomodate a large number of players simultaneously.

The Augusta play system encourages imagination development games, physical development, social intelligence development, curiosity and exploration, independence, spatial orientation, stage planning, and proper organization.

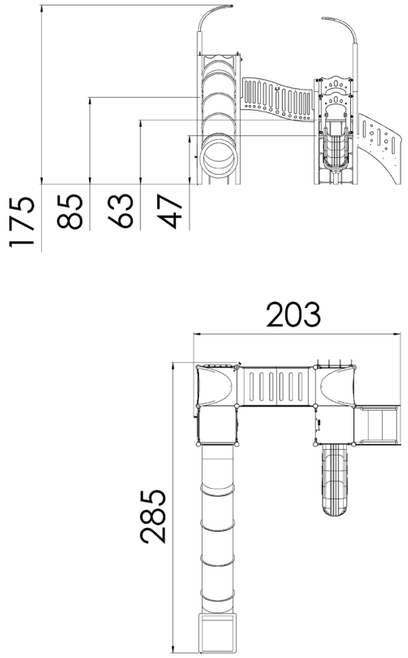

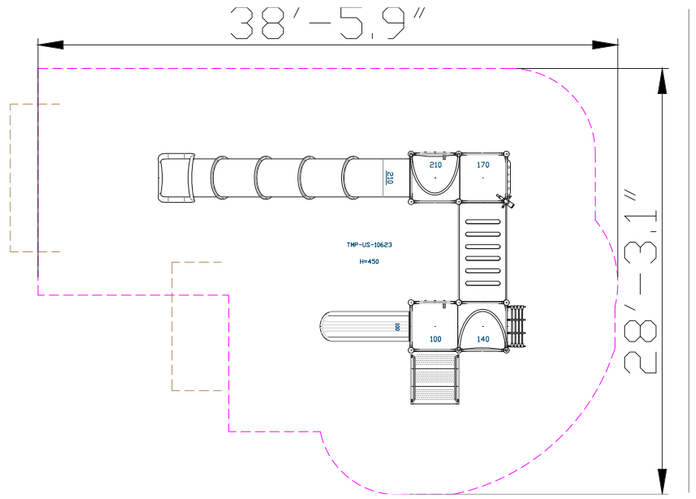





Recycled HDPE

HDPE (High-Density Polyethylene) is a recycled material made from high-density polyethylene, produced from recycled materials that allows for further recycling. It excels in resistance to UV rays and wear and tear, making it particularly suitable for use in outdoor playground equipment. Its touch is smooth and pleasant, and its appearance is maintained over time. The advantages include high resistance to harsh weather conditions and environmental preservation. The material is capable of absorbing high energy, which helps prevent fractures.



Steel

Steel structure that is strong and durable, oven-painted galvanized and coated with lead-free polyester powder for corrosion and rust resistance.

The steel meets strict EN 1176 standards, ensuring high quality and safety.

The steel is anti-vandalistic, requires minimal maintenance, and is fully recyclable.

The high-quality paint ensures weather resistance and maintains a new appearance over time.

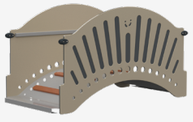

Open Bridge

The open bridge allows safe and convenient passage between parts of the structure, developing players' motor skills and balance. The height dimension from the ground adds a sense of excitement and adventure as players practice maintaining stability and confidence while crossing the bridge. Playing on the bridge encourages movement and self-confidence.



Game

The game allows players to explore and engage in various activities, enhancing their creativity, imagination, and cognitive skills. It encourages players to play togethe



Rope Ladder

The rope ladder provides vertical access to the play structure and encourages players to develop physical skills such as strength, coordination, and balance. Climbing the rope ladder strengthens hand and leg muscles and develops a sense of balance. The ladder encourages players to face challenges and develop flexibility and agility.

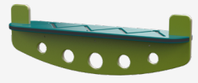

Game

The game allows players to explore and engage in various activities, enhancing their creativity, imagination, and cognitive skills. It encourages players to play togethe

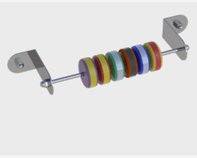

Abacus

The abacus enhances players' mathematical and cognitive skills. Through play with the abacus, players learn to count, calculate, and solve mathematical problems in a fun and challenging way.



Barrel Slide

The barrel slide provides an exciting and challenging sliding experience, combining movement with a sense of adventure. Sliding in this slide develops players' motor skills and coordination as they move through the tube at varying speeds. The sliding action boosts self-confidence and encourages daring as players face the challenge of fast movement. The slide is a fundamental and important element in any playground and is considered one of the leading and most beloved attractions for players of all ages.



Toddler Slide

The toddler slide provides a safe and enjoyable sliding experience for little ones. It develops coordination, movement, balance, and self-confidence for young players.



Roof

The roof provides shade and protection from the sun and rain, allowing players to enjoy play in comfortable conditions. In addition to its functional role, the roof is designed to enhance the look of the structure and align with the story told by the design of the play structure. The roof design contributes to creating an engaging and unique play environment that stimulates imagination and enriches the players' play experience.





Physical Development

Climbing - Strengthening arm and leg muscles, developing fitness and endurance. **Sliding** - Strengthening leg and arm muscles and improving coordination.

Cognitive Development

Spatial awareness- Improving the ability to understand and navigate space through mazes and courses.. **Curiosity** - Encouraging exploration and discovery through equipment providing new and unfamiliar experiences. **Creativity**- Developing creative thinking and imagination in open and interactive play.

Emotional Development

Imagination- Encouraging imagination and creating play worlds. **Courage**- Facing fears and new challenges. **Confidence**- Building self-confidence and belief in one's personal abilities. **Independence**- Developing independence and the ability to make personal decisions. Resilience- Coping with failure and trying again.

Social Development

Communication- Developing effective and clear communication skills with playmates. **Friendship creation-** Creating friendships and strengthening social bonds.

Motor Development

Hand-eye coordination - Developing coordination and precision in activities requiring fine motor skills. Foot-eye coordination - Improving coordination and balance through various equipment.