TSP-10625

Indianapolis

HDPE play system model Indianapolis

Recycled HDPE:

Steel:

Polycarbonate:

Crawling Hanging Sliding Climbing Jumping



Ages 2-5 | Users 88 | Dimensions L: 27'-6.6" W: 40'-10.8" H:14" | L: 861 W: 1278 H: 440 cm | Safety Zone 51'-6.5"/42'-2.2" | 1570 / 1285 cm | Fall Height 160" | 5'-1.4" cm | Accessible

The Indianapolis is a combined play system featuring 3 towers and elements for experiential and challenging activity. The structure allows for the development of imagination, physical development, and social intelligence development, encourages curiosity and exploration, independence, spatial orientation, stage planning, and proper organization, and provides many play options for all ages without a sense of exhaustion or loss of interest.

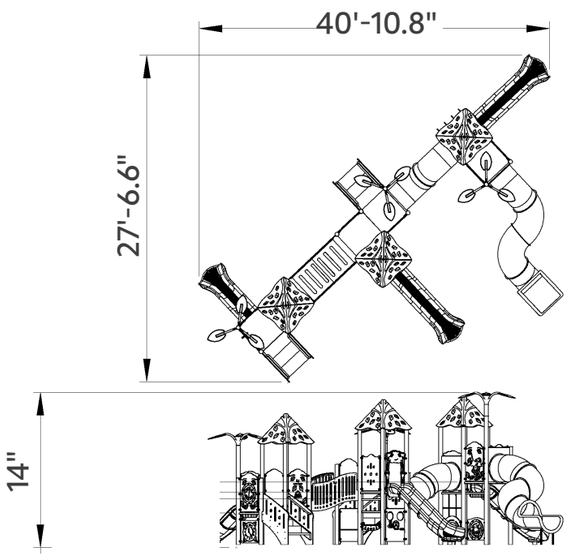

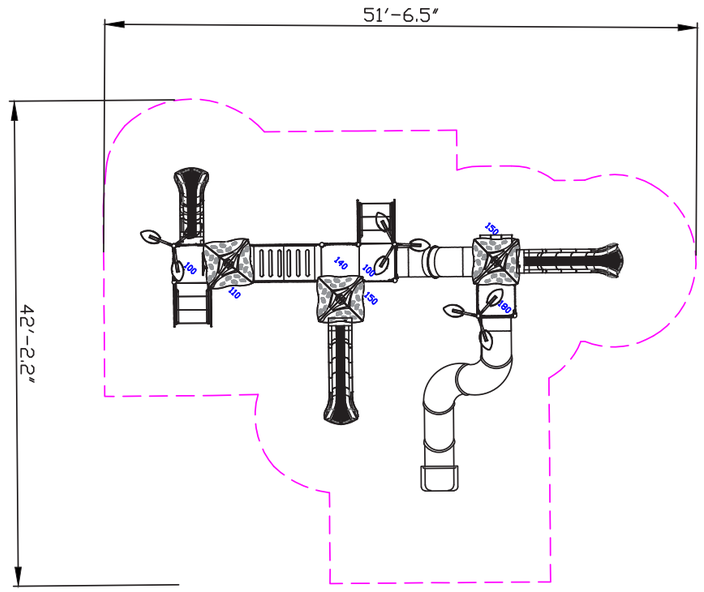





Recycled HDPE

HDPE (High-Density Polyethylene) is a recycled material made from high-density polyethylene, produced from recycled materials that allows for further recycling. It excels in resistance to UV rays and wear and tear, making it particularly suitable for use in outdoor playground equipment. Its touch is smooth and pleasant, and its appearance is maintained over time. The advantages include high resistance to harsh weather conditions and environmental preservation. The material is capable of absorbing high energy, which helps prevent fractures.



Steel

Steel structure that is strong and durable, oven-painted galvanized and coated with lead-free polyester powder for corrosion and rust resistance.

The steel meets strict EN 1176 standards, ensuring high quality and safety.

The steel is anti-vandalistic, requires minimal maintenance, and is fully recyclable.

The high-quality paint ensures weather resistance and maintains a new appearance over time.



Polycarbonate

Colored polycarbonate is a durable, lightweight, and transparent thermoplastic polymer that complies with international standards such as EN 71 and ISO 179.

It has a smooth touch, a glossy appearance, and is available in a variety of colors and transparencies.

The material is used to create decorative elements in playground equipment, offering high impact resistance, UV protection, and great design flexibility



Crawl Tunnel

The crawl tunnel offers a physical challenge that develops players' motor skills, coordination, and balance. Players crawl through the tunnel and enjoy the sense of wonder and excitement as they enter from one side and exit from the other. Playing in the tunnel encourages exploration, daring, and self-confidence while maintaining a safe and enjoyable environment.

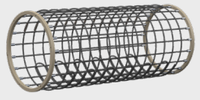

Open Bridge

The open bridge allows safe and convenient passage between parts of the structure, developing players' motor skills and balance. The height dimension from the ground adds a sense of excitement and adventure as players practice maintaining stability and confidence while crossing the bridge. Playing on the bridge encourages movement and self-confidence.

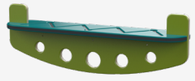

Game

The game allows players to explore and engage in various activities, enhancing their creativity, imagination, and cognitive skills. It encourages players to play togethe



Play Panel

The play panel provides a variety of interactive play options that develop players' motor and cognitive skills. Each panel offers a unique activity that stimulates thinking and encourages players to learn and discover more.



Rope Ladder

The rope ladder provides vertical access to the play structure and encourages players to develop physical skills such as strength, coordination, and balance. Climbing the rope ladder strengthens hand and leg muscles and develops a sense of balance. The ladder encourages players to face challenges and develop flexibility and agility.



Decorations and Accessories

Decorations and accessories adorn the structures and highlight the theme of the playground. They encourage players to use their imagination and creativity during play.



Barrel Slide

The barrel slide provides an exciting and challenging sliding experience, combining movement with a sense of adventure. Sliding in this slide develops players' motor skills and coordination as they move through the tube at varying speeds. The sliding action boosts self-confidence and encourages daring as players face the challenge of fast movement. The slide is a fundamental and important element in any playground and is considered one of the leading and most beloved attractions for players of all ages.

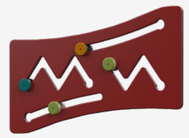

Moving Game

The moving game provides dynamic activity that develops players' coordination, strength, and motor skills.





Physical Development

Climbing - Strengthening arm and leg muscles, developing fitness and endurance. **Sliding** - Strengthening leg and arm muscles and improving coordination.

Cognitive Development

Spatial awareness- Improving the ability to understand and navigate space through mazes and courses.. **Curiosity** - Encouraging exploration and discovery through equipment providing new and unfamiliar experiences.

Emotional Development

Imagination- Encouraging imagination and creating play worlds. **Confidence**- Building self-confidence and belief in one's personal abilities. **Independence**- Developing independence and the ability to make personal decisions. **Patience**- Practicing patience and waiting for one's turn.

Social Development

Respect for boundaries- Learning the importance of respecting personal and social boundaries. **Friendship creation-** Creating friendships and strengthening social bonds.

Motor Development

Hand-eye coordination - Developing coordination and precision in activities requiring fine motor skills. Foot-eye coordination - Improving coordination and balance through various equipment.

For illustration purposes only ADA **Indianapolis** TSP-10625 4/4 TM