TSP-10700

Jefferson City

HDPE play system model Jefferson City

Recycled HDPE:

Steel:

Rope Cables:

Crawling

Hanging

Sliding

Jumping



Ages 2-5

Users 38

Dimensions L: 25'-4.5" W: 21'-8" H:12'-6.1" | L: 793 W: 677 H: 391 cm

Safety Zone 40'-1.3"/35'-10.2" | 1222 / 1092 cm

Fall Height 3'-10" | 120 cm

Accessible

The Jefferson City is a play system designed as an open, modern, and airy course, developed especially for young children and includes various elements for climbing, sliding, crawling, and playing.

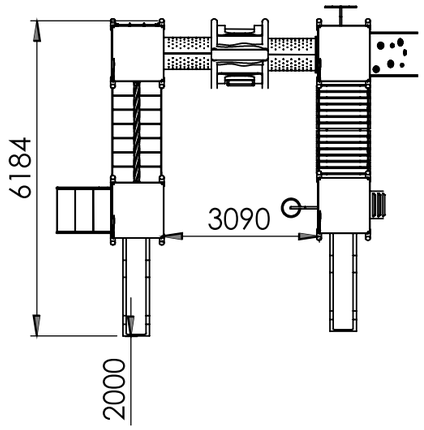

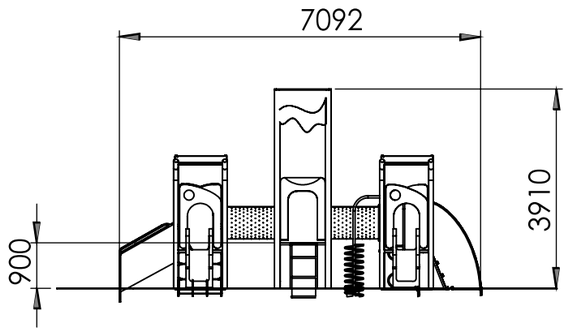

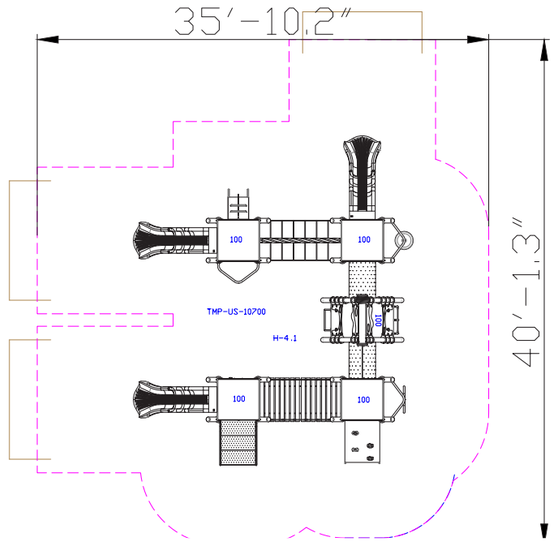





Recycled HDPE

HDPE (High-Density Polyethylene) is a recycled material made from high-density polyethylene, produced from recycled materials that allows for further recycling. It excels in resistance to UV rays and wear and tear, making it particularly suitable for use in outdoor playground equipment. Its touch is smooth and pleasant, and its appearance is maintained over time. The advantages include high resistance to harsh weather conditions and environmental preservation. The material is capable of absorbing high energy, which helps prevent fractures.



Steel

Steel structure that is strong and durable, oven-painted galvanized and coated with lead-free polyester powder for corrosion and rust resistance.

The steel meets strict EN 1176 standards, ensuring high quality and safety.

The steel is anti-vandalistic, requires minimal maintenance, and is fully recyclable.

The high-quality paint ensures weather resistance and maintains a new appearance over time.



Rope Cables

Rope Cables are made of synthetic polypropylene (PP) fibers combined with a galvanized steel core for improved strength and durability. They meet strict standards, such as ASTM A240 and EN 10088, ensuring durability and safety for use in playground equipment. . The cables offer a soft and pleasant touch that does not harm the hands during use and are available in various diameters and colors, allowing for creative and aesthetic design.

Straight Bridge



The straight bridge allows safe and convenient passage between parts of the structure, developing players' motor skills and balance. The height effect from the ground adds a sense of adventure and challenge as players learn to maintain stability and confidence during the crossing. Playing on the bridge encourages movement and self-confidence.

Toddler Slide



The toddler slide provides a safe and enjoyable sliding experience for little ones. It develops coordination, movement, balance, and self-confidence for young players.

Jungle Bridge

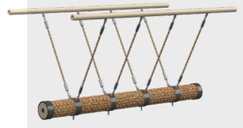

The jungle bridge is made of ropes in natural hues that mimic tree trunks and forest branches, giving a natural and adventurous look. The bridge is elevated, enhancing the sense of adventure and challenge as players progress along a relatively narrow strip. Playing on the jungle bridge encourages players to maintain balance and stability while moving, providing a fun and exciting experience reminiscent of walking through a wild forest.

Climbing Element



The climbing element offers a physical challenge that develops muscle strength, coordination, and balance. Climbing on the element encourages children to overcome fears and build self-confidence and perseverance. Additionally, the element helps develop problem-solving skills as children look for efficient and safe ways to climb.

Crawl Tunnel



The crawl tunnel offers a physical challenge that develops players' motor skills, coordination, and balance. Players crawl through the tunnel and enjoy the sense of wonder and excitement as they enter from one side and exit from the other. Playing in the tunnel encourages exploration, daring, and self-confidence while maintaining a safe and enjoyable environment.

Play Panel

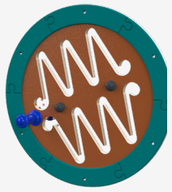

The play panel provides a variety of interactive play options that develop players' motor and cognitive skills. Each panel offers a unique activity that stimulates thinking and encourages players to learn and discover more.

Climbing Element

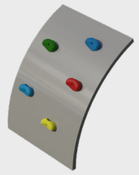

The climbing element offers a physical challenge that develops muscle strength, coordination, and balance. Climbing on the element encourages children to overcome fears and build self-confidence and perseverance. Additionally, the element helps develop problem-solving skills as children look for efficient and safe ways to climb.

Rope Ladder



The rope ladder provides vertical access to the play structure and encourages players to develop physical skills such as strength, coordination, and balance. Climbing the rope ladder strengthens hand and leg muscles and develops a sense of balance. The ladder encourages players to face challenges and develop flexibility and agility.





Motor Development

Foot-eye coordination - Improving coordination and balance through various equipment. Core muscle strengthening- Strengthening abdominal and back muscles through challenging equipment.

Cognitive Development

Spatial awareness- Improving the ability to understand and navigate space through mazes and courses.. Curiosity - Encouraging exploration and discovery through equipment providing new and unfamiliar experiences.

Emotional Development

Imagination- Encouraging imagination and creating play worlds. Confidence- Building self-confidence and belief in one's personal abilities. Independence- Developing independence and the ability to make personal decisions.

Social Development

Respect for boundaries- Learning the importance of respecting personal and social boundaries. Friendship creation- Creating friendships and strengthening social bonds.

Physical Development

Climbing - Strengthening arm and leg muscles, developing fitness and endurance Sliding - Strengthening leg and arm muscles and improving coordination.