# TSP-10702

## Topeka

HDPE play system model Topeka

Recycled HDPE:

Steel:

Polycarbonate:

Sliding

Rotation

Climbing

Jumping



Ages 2-5

Users 48

Dimensions L: 18'-4.8" W: 24'-1.9" H: 13'-8.7" | L: 575 W: 755 H: 429 cm

Safety Zone 36'-7.4"/42'-11.7" | 1115/ 1308 cm

Fall Height 150" | 4'-9.6" cm

Accessible

A designed and accessible combined structure including multiple climbing and sliding options and containing a large number of players simultaneously.

Includes accessible stairs, tiered climbing surfaces, ladders, play panels, and a double slide to enhance the play experience.

Suitable for imagination development games, physical development, and social intelligence development.

Encourages curiosity and exploration, independence, spatial orientation, stage planning, and proper organization.

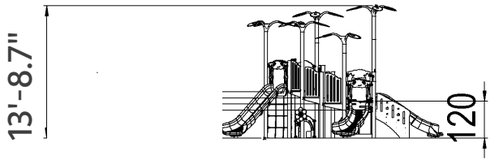


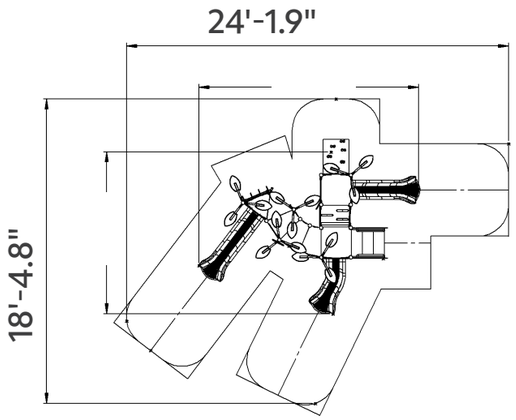


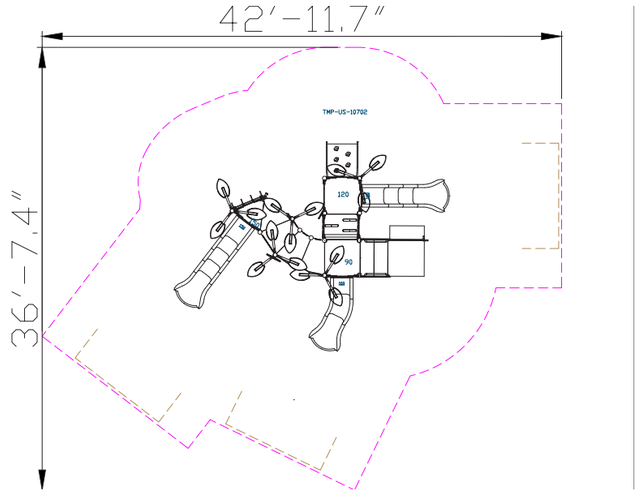






## Recycled HDPE

HDPE (High-Density Polyethylene) is a recycled material made from high-density polyethylene, produced from recycled materials that allows for further recycling. It excels in resistance to UV rays and wear and tear, making it particularly suitable for use in outdoor playground equipment. Its touch is smooth and pleasant, and its appearance is maintained over time. The advantages include high resistance to harsh weather conditions and environmental preservation. The material is capable of absorbing high energy, which helps prevent fractures.



## Steel

Steel structure that is strong and durable, oven-painted galvanized and coated with lead-free polyester powder for corrosion and rust resistance.

The steel meets strict EN 1176 standards, ensuring high quality and safety.

The steel is anti-vandalistic, requires minimal maintenance, and is fully recyclable.

The high-quality paint ensures weather resistance and maintains a new appearance over time.



## Polycarbonate

Colored polycarbonate is a durable, lightweight, and transparent thermoplastic polymer that complies with international standards such as EN 71 and ISO 179.

It has a smooth touch, a glossy appearance, and is available in a variety of colors and transparencies.

The material is used to create decorative elements in playground equipment, offering high impact resistance, UV protection, and great design flexibility



## Sound Element

The sound element allows players to create and listen to sounds, adding an interactive and experiential dimension to the play. The element requires at least two players, encouraging social and creative play. It fosters the development of rhythm and timing and promotes an understanding of the propagation of sound waves between participants.



## Open Bridge

The open bridge allows safe and convenient passage between parts of the structure, developing players' motor skills and balance. The height dimension from the ground adds a sense of excitement and adventure as players practice maintaining stability and confidence while crossing the bridge. Playing on the bridge encourages movement and self-confidence.



## Slide

A slide is a fundamental and important element in any playground, considered one of the leading and most beloved attractions for players of all ages. The slide provides an enjoyable and exciting sliding experience that develops players' motor skills and coordination. Playing on the slide encourages movement, daring, and self-confidence.



## Rope Ladder

The rope ladder provides vertical access to the play structure and encourages players to develop physical skills such as strength, coordination, and balance. Climbing the rope ladder strengthens hand and leg muscles and develops a sense of balance. The ladder encourages players to face challenges and develop flexibility and agility.

## Telescope



The telescope allows players to explore and observe their surroundings in an enjoyable way. Playing with the telescope encourages players to develop curiosity and interest in their environment. It is also suitable for imaginative play.



## Decorations and Accessories

Decorations and accessories adorn the structures and highlight the theme of the playground. They encourage players to use their imagination and creativity during play.

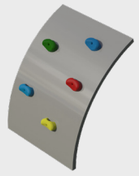

## Climbing Element

The climbing element offers a physical challenge that develops muscle strength, coordination, and balance. Climbing on the element encourages children to overcome fears and build self-confidence and perseverance. Additionally, the element helps develop problem-solving skills as children look for efficient and safe ways to climb.



## Designed Panel

The designed panel adds an aesthetic and unique dimension to the playground equipment, enhancing the overall play experience. The panel allows players to feel part of a creative and imaginative world, designed to align with the narrative of the playground. The design ensures easy and safe access to play activities, while maintaining a sense of security and enjoyment.





### Physical Development

**Climbing** - Strengthening arm and leg muscles, developing fitness and endurance. **Sliding** - Strengthening leg and arm muscles and improving coordination.

### Cognitive Development

**Curiosity** - Encouraging exploration and discovery through equipment providing new and unfamiliar experiences. **Creativity**- Developing creative thinking and imagination in open and interactive play.

### Emotional Development

**Imagination**- Encouraging imagination and creating play worlds. **Courage**- Facing fears and new challenges. **Confidence**- Building self-confidence and belief in one's personal abilities. **Independence**- Developing independence and the ability to make personal decisions. **Resilience**- Coping with failure and trying again.

### Social Development

**Respect for boundaries**- Learning the importance of respecting personal and social boundaries. **Friendship creation-** Creating friendships and strengthening social bonds.

### Motor Development

Hand-eye coordination - Developing coordination and precision in activities requiring fine motor skills. Foot-eye coordination - Improving coordination and balance through various equipment.