TSP-10708

Boise

The Boise is a play system featuring elements for climbing, crawling, and play.

The towers, tunnels, bridges, and slides provide children with an enjoyable and challenging play experience. The Boise helps in developing physical skills such as balance, coordination, and strength.

Recycled HDPE:

Steel:

Balancing Rotation Climbing Jumping Sliding



Ages 2-5 | Users 37 | Dimensions L: 15'-3.9" W: 34'-9.8" H: 14'-1.3" | L: 479 W: 1088 H: 441 cm | Safety Zone 43'-7.1"/37'-7.2" | 1328 / 1146 cm | Fall Height 200" | 6'-4.8" cm | Accessible

Physical Development

Climbing - Strengthening arm and leg muscles, developing fitness and endurance Crawling - Strengthening abdominal and back muscles, improving coordination and flexibility. Sliding - Strengthening leg and arm muscles and improving coordination.

Emotional Development

Imagination- Encouraging imagination and creating play worlds. Confidence- Building self-confidence and belief in one's personal abilities. Independence- Developing independence and the ability to make personal decisions. Patience- Practicing patience and waiting for one's turn.

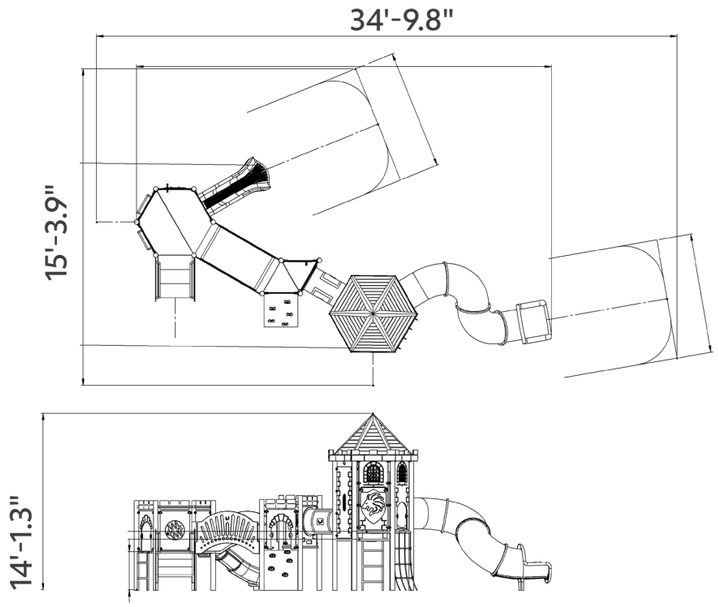

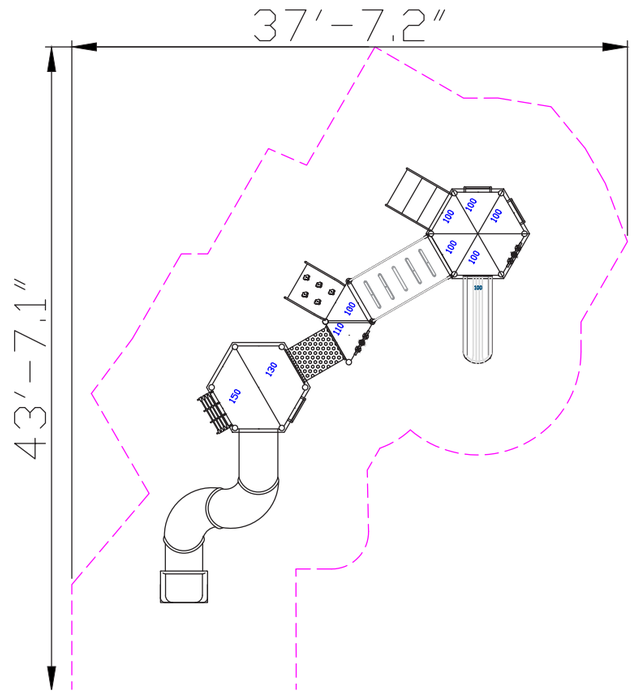





Recycled HDPE

HDPE (High-Density Polyethylene) is a recycled material made from high-density polyethylene, produced from recycled materials that allows for further recycling. It excels in resistance to UV rays and wear and tear, making it particularly suitable for use in outdoor playground equipment. Its touch is smooth and pleasant, and its appearance is maintained over time. The advantages include high resistance to harsh weather conditions and environmental preservation. The material is capable of absorbing high energy, which helps prevent fractures.



Steel

Steel structure that is strong and durable, oven-painted galvanized and coated with lead-free polyester powder for corrosion and rust resistance.

The steel meets strict EN 1176 standards, ensuring high quality and safety.

The steel is anti-vandalistic, requires minimal maintenance, and is fully recyclable.

The high-quality paint ensures weather resistance and maintains a new appearance over time.

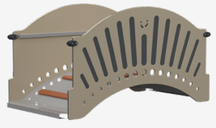

Open Bridge

The open bridge allows safe and convenient passage between parts of the structure, developing players' motor skills and balance. The height dimension from the ground adds a sense of excitement and adventure as players practice maintaining stability and confidence while crossing the bridge. Playing on the bridge encourages movement and self-confidence.



Designed Panel

The designed panel adds an aesthetic and unique dimension to the playground equipment, enhancing the overall play experience. The panel allows players to feel part of a creative and imaginative world, designed to align with the narrative of the playground. The design ensures easy and safe access to play activities, while maintaining a sense of security and enjoyment.



Play Panel

The play panel provides a variety of interactive play options that develop players' motor and cognitive skills. Each panel offers a unique activity that stimulates thinking and encourages players to learn and discover more.

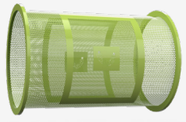

Crawl Tunnel

The crawl tunnel offers a physical challenge that develops players' motor skills, coordination, and balance. Players crawl through the tunnel and enjoy the sense of wonder and excitement as they enter from one side and exit from the other. Playing in the tunnel encourages exploration, daring, and self-confidence while maintaining a safe and enjoyable environment.



Barrel Slide

The barrel slide provides an exciting and challenging sliding experience, combining movement with a sense of adventure. Sliding in this slide develops players' motor skills and coordination as they move through the tube at varying speeds. The sliding action boosts self-confidence and encourages daring as players face the challenge of fast movement. The slide is a fundamental and important element in any playground and is considered one of the leading and most beloved attractions for players of all ages.

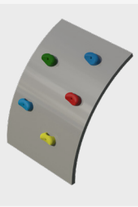

Climbing Element

The climbing element offers a physical challenge that develops muscle strength, coordination, and balance. Climbing on the element encourages children to overcome fears and build self-confidence and perseverance. Additionally, the element helps develop problem-solving skills as children look for efficient and safe ways to climb.



Rope Ladder

The rope ladder provides vertical access to the play structure and encourages players to develop physical skills such as strength, coordination, and balance. Climbing the rope ladder strengthens hand and leg muscles and develops a sense of balance. The ladder encourages players to face challenges and develop flexibility and agility.



Toddler Slide

The toddler slide provides a safe and enjoyable sliding experience for little ones. It develops coordination, movement, balance, and self-confidence for young players.