TSP-10732

Branson

HDPE play system model Branson

Recycled HDPE:

Steel:

Balancing Crawling Climbing Jumping Sliding

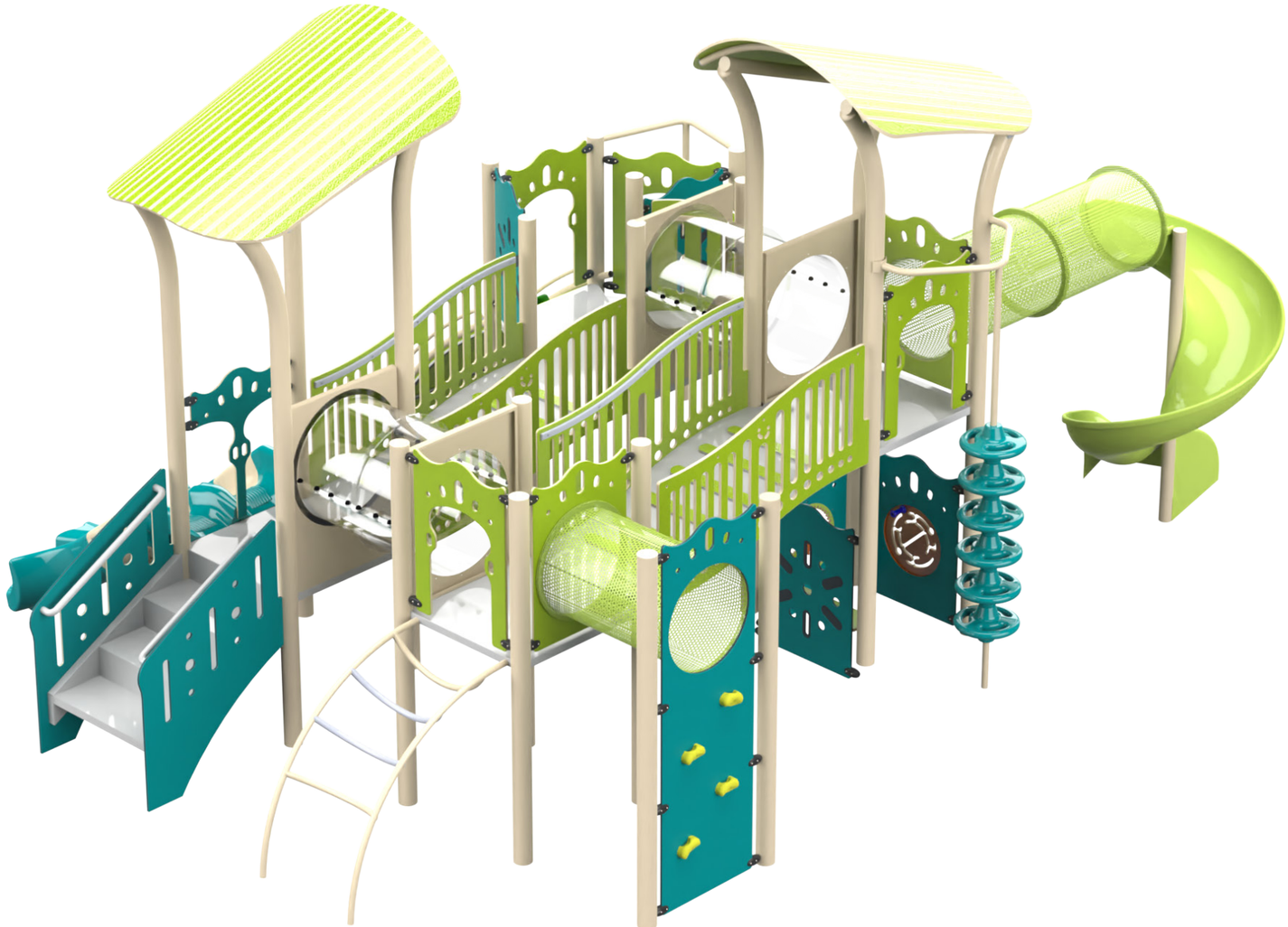

Ages 2-5 | Users 48 | Dimensions L: 24'-9.6" W: 24'-9.6" H: 16'-10.8" | L: 775 W: 775 H: 528 cm | Safety Zone 28'-5.8"/36'-1.9" | 866 / 1100 cm | Fall Height 5'-1.4" | 160 cm | Accessible

The Branson play system is a wide and varied playground equipment that incorporates dynamic elements of climbing, crawling, and sliding, designed for children of all ages. The structure is built from a galvanized and oven-painted steel, ensuring high durability and maximum safety for users.

The structure includes various elements such as a spiral slide, bridges, crawling tunnels, various climbing walls, and ladders designed in diverse styles. All these encourage children to develop physical skills, think creatively, and deal with physical challenges while enjoying play. Additionally, the structure is adapted for accessibility with accessible stairs and designed railings, so that children with disabilities can also participate and enjoy the play that the structure offers.

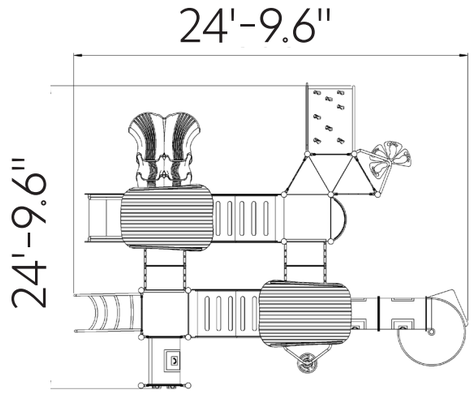

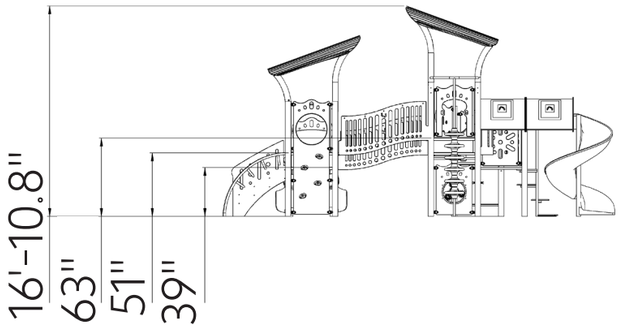

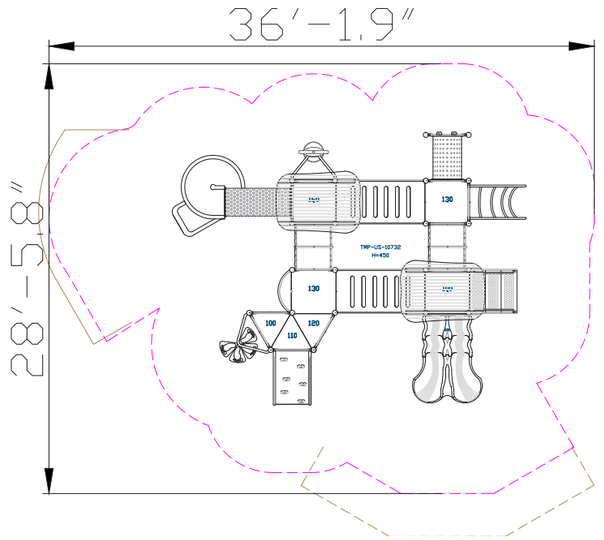





Recycled HDPE

HDPE (High-Density Polyethylene) is a recycled material made from high-density polyethylene, produced from recycled materials that allows for further recycling. It excels in resistance to UV rays and wear and tear, making it particularly suitable for use in outdoor playground equipment. Its touch is smooth and pleasant, and its appearance is maintained over time. The advantages include high resistance to harsh weather conditions and environmental preservation. The material is capable of absorbing high energy, which helps prevent fractures.



Steel

Steel structure that is strong and durable, oven-painted galvanized and coated with lead-free polyester powder for corrosion and rust resistance.

The steel meets strict EN 1176 standards, ensuring high quality and safety.

The steel is anti-vandalistic, requires minimal maintenance, and is fully recyclable.

The high-quality paint ensures weather resistance and maintains a new appearance over time.



Double Slide

The double slide allows two players to slide simultaneously, encouraging friendly competition and the development of social skills. Shared sliding fosters cooperation and shared fun.

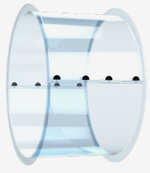

Crawl Tunnel

The crawl tunnel offers a physical challenge that develops players' motor skills, coordination, and balance. Players crawl through the tunnel and enjoy the sense of wonder and excitement as they enter from one side and exit from the other. Playing in the tunnel encourages exploration, daring, and self-confidence while maintaining a safe and enjoyable environment.



Slide

A slide is a fundamental and important element in any playground, considered one of the leading and most beloved attractions for players of all ages. The slide provides an enjoyable and exciting sliding experience that develops players' motor skills and coordination. Playing on the slide encourages movement, daring, and self-confidence.



Climbing Wall

The climbing wall offers a physical challenge that develops the muscle strength, coordination and weight of the players. Climbing the wall improves their problem solving. This is a place where players overcome fears and develop courage and self-confidence.

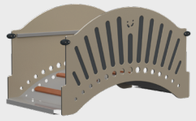

Open Bridge

The open bridge allows safe and convenient passage between parts of the structure, developing players' motor skills and balance. The height dimension from the ground adds a sense of excitement and adventure as players practice maintaining stability and confidence while crossing the bridge. Playing on the bridge encourages movement and self-confidence.

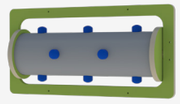

Play Panel

The play panel provides a variety of interactive play options that develop players' motor and cognitive skills. Each panel offers a unique activity that stimulates thinking and encourages players to learn and discover more.



Designed Climbing Element

The designed climbing element combines physical challenge with a unique and inviting design. Players develop physical skills such as strength, coordination, and balance while playing in a creative and designed environment. The unique design encourages players to play and explore, fostering their imagination and creativity.



Roof

The roof provides shade and protection from the sun and rain, allowing players to enjoy play in comfortable conditions. In addition to its functional role, the roof is designed to enhance the look of the structure and align with the story told by the design of the play structure. The roof design contributes to creating an engaging and unique play environment that stimulates imagination and enriches the players' play experience.





Emotional Development

Courage- Facing fears and new challenges. Confidence- Building self-confidence and belief in one's personal abilities. Independence- Developing independence and the ability to make personal decisions.

Cognitive Development

Spatial awareness- Improving the ability to understand and navigate space through mazes and courses.. Curiosity - Encouraging exploration and discovery through equipment providing new and unfamiliar experiences.

Physical Development

Climbing - Strengthening arm and leg muscles, developing fitness and endurance. Sliding - Strengthening leg and arm muscles and improving coordination. Crawling - Strengthening abdominal and back muscles, improving coordination and flexibility. Jumping- Improving leg strength and balance. Balancing- Improving balance and posture.

Motor Development

Foot-eye coordination - Improving coordination and balance through various equipment. Hand-eye coordination - Developing coordination and precision in activities requiring fine motor skills.

Social Development

Communication- Developing effective and clear communication skills with playmates Empathy- Developing empathy and the ability to understand and empathize with others' feelings. Friendship creation- Creating friendships and strengthening social bonds.