TSP-10739

Berkeley

HDPE play system model Berkeley

Recycled HDPE:

Steel:

Rope Cables:

Balancing

Crawling

Climbing

Jumping

Hanging

Sliding



Ages 5-12

Users 124

Dimensions L: 46'-2.5" W: 54'-2.9" H: 25'-5.7" | L: 1444 W: 1695 H: 796 cm

Safety Zone 66'-4.3"/71'-6.3" | 2022 / 2179 cm

Fall Height 9'-3.4" | 290 cm

Accessible

The Berkeley is a combined play system featuring high climbing towers and elements for experiential and challenging play.

The structure allows for the development of imagination, physical development, and social intelligence development, encourages curiosity and exploration, independence, spatial orientation, stage planning, and proper organization, and provides many play options for all ages without a sense of exhaustion or loss of interest.

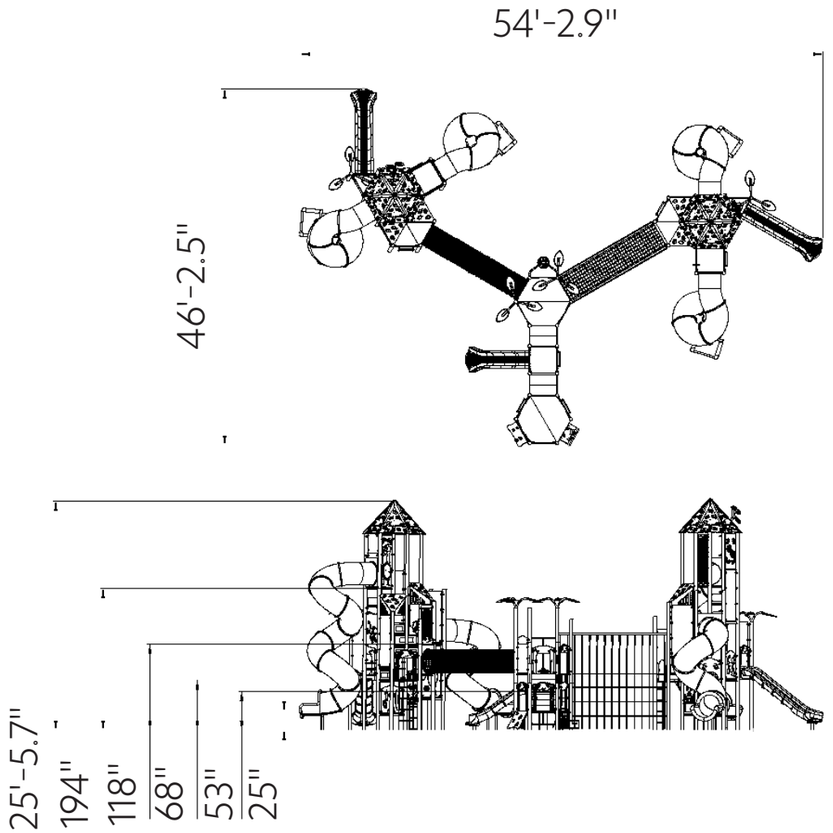

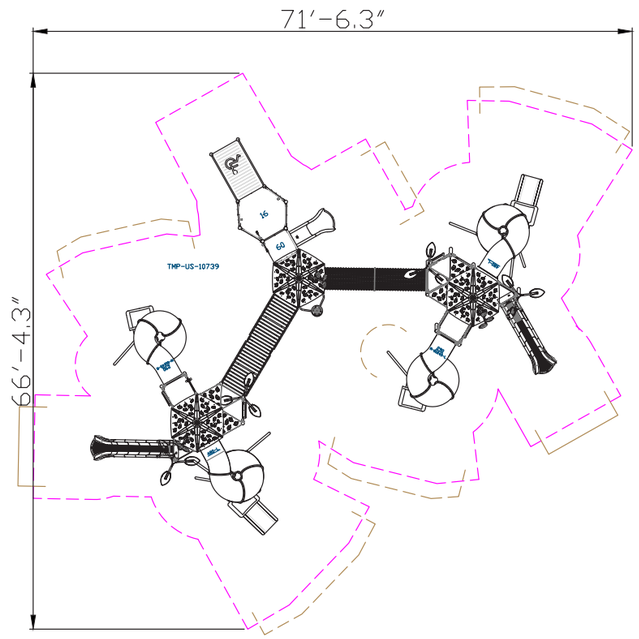





Recycled HDPE

HDPE (High-Density Polyethylene) is a recycled material made from high-density polyethylene, produced from recycled materials that allows for further recycling. It excels in resistance to UV rays and wear and tear, making it particularly suitable for use in outdoor playground equipment. Its touch is smooth and pleasant, and its appearance is maintained over time. The advantages include high resistance to harsh weather conditions and environmental preservation. The material is capable of absorbing high energy, which helps prevent fractures.



Steel

Steel structure that is strong and durable, oven-painted galvanized and coated with lead-free polyester powder for corrosion and rust resistance.

The steel meets strict EN 1176 standards, ensuring high quality and safety.

The steel is anti-vandalistic, requires minimal maintenance, and is fully recyclable.

The high-quality paint ensures weather resistance and maintains a new appearance over time.



Rope Cables

Rope Cables are made of synthetic polypropylene (PP) fibers combined with a galvanized steel core for improved strength and durability. They meet strict standards, such as ASTM A240 and EN 10088, ensuring durability and safety for use in playground equipment. . The cables offer a soft and pleasant touch that does not harm the hands during use and are available in various diameters and colors, allowing for creative and aesthetic design.



Climbing Element

The climbing element offers a physical challenge that develops muscle strength, coordination, and balance. Climbing on the element encourages children to overcome fears and build self-confidence and perseverance. Additionally, the element helps develop problem-solving skills as children look for efficient and safe ways to climb.



Printed Panel

The printed panel displays images, patterns, and illustrations that stimulate imagination and encourage players to tell stories and create narratives. Playing with the panel develops creative and cognitive skills, promotes literacy, curiosity, and learning.

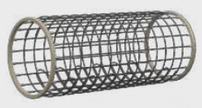

Crawl Bridge

The crawl bridge offers a physical challenge that develops players' motor skills, coordination, and balance. Positioned at a height, it adds a sense of adventure and excitement. Players crawl through the bridge, enjoying a feeling of wonder and thrill as they enter from one side and emerge from the other. Playing on the bridge encourages movement, exploration, and a sense of achievement.



Climbing Element

The climbing element offers a physical challenge that develops muscle strength, coordination, and balance. Climbing on the element encourages children to overcome fears and build self-confidence and perseverance. Additionally, the element helps develop problem-solving skills as children look for efficient and safe ways to climb.



Rope Ladder

The rope ladder provides vertical access to the play structure and encourages players to develop physical skills such as strength, coordination, and balance. Climbing the rope ladder strengthens hand and leg muscles and develops a sense of balance. The ladder encourages players to face challenges and develop flexibility and agility.



Decorations and Accessories

Decorations and accessories adorn the structures and highlight the theme of the playground. They encourage players to use their imagination and creativity during play.

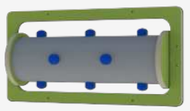

Play Panel

The play panel provides a variety of interactive play options that develop players' motor and cognitive skills. Each panel offers a unique activity that stimulates thinking and encourages players to learn and discover more.



Barrel Slide

The barrel slide provides an exciting and challenging sliding experience, combining movement with a sense of adventure. Sliding in this slide develops players' motor skills and coordination as they move through the tube at varying speeds. The sliding action boosts self-confidence and encourages daring as players face the challenge of fast movement. The slide is a fundamental and important element in any playground and is considered one of the leading and most beloved attractions for players of all ages.



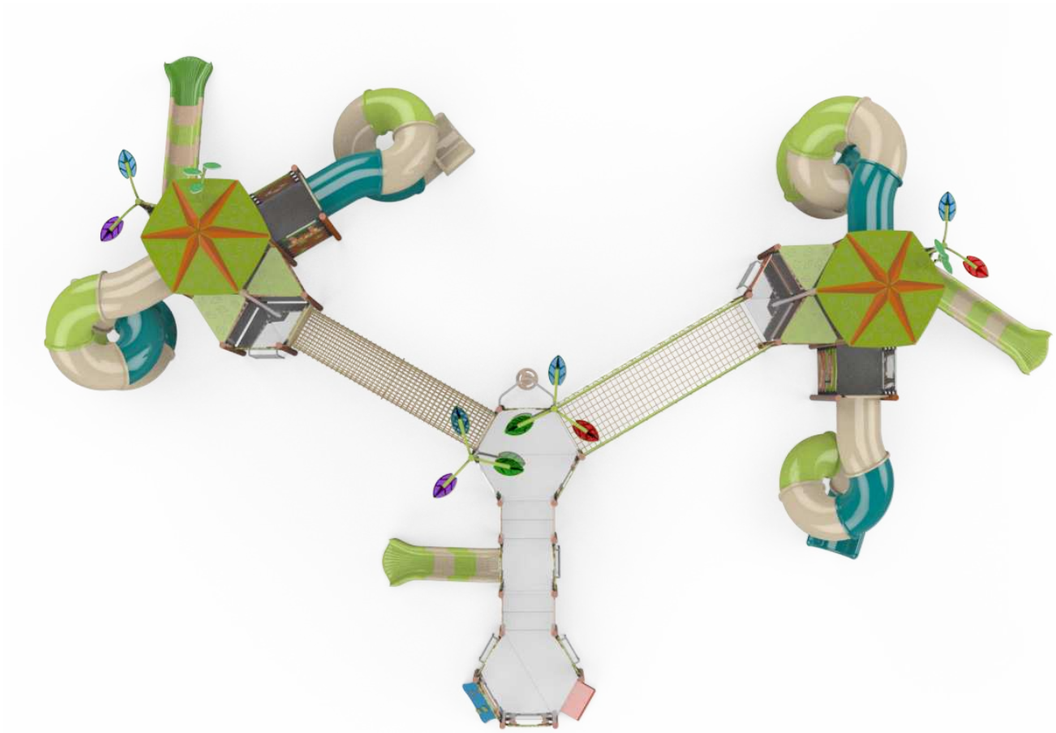

Motor Development

Foot-eye coordination - Improving coordination and balance through various equipment. Hand-eye coordination - Developing coordination and precision in activities requiring fine motor skills.

Cognitive Development

Spatial awareness- Improving the ability to understand and navigate space through mazes and courses.. Curiosity - Encouraging exploration and discovery through equipment providing new and unfamiliar experiences.

Emotional Development

Courage- Facing fears and new challenges. Confidence- Building self-confidence and belief in one's personal abilities. Independence- Developing independence and the ability to make personal decisions. Patience- Practicing patience and waiting for one's turn. Resilience- Coping with failure and trying again.

Social Development

Communication- Developing effective and clear communication skills with playmates Empathy- Developing empathy and the ability to understand and empathize with others' feelings. Friendship creation- Creating friendships and strengthening social bonds.

Physical Development

Climbing - Strengthening arm and leg muscles, developing fitness and endurance Balancing- Improving balance and posture. Sliding - Strengthening leg and arm muscles and improving coordination. Jumping- Improving leg strength and balance. Hanging - Strengthening arm, back, and shoulder muscles. Crawling - Strengthening abdominal and back muscles, improving coordination and flexibility.