TSP-10745

Aventura

HDPE play system model Aventura

Recycled HDPE:

Steel:

Rope Cables:

Balancing Crawling Hanging Sliding Climbing



Ages 5-12 | Users 235 | Dimensions L: 61'-9.5" W: 37'-9.5" H: 25'-11.4" | L: 1931 W: 1181 H: 811 cm | Safety Zone 51'-9.5"/90'-3.0" | 1577 / 2751 cm | Fall Height 9'-3.4" | 290 cm | Accessible

The Aventura play system is an impressive combined structure, featuring three towers of varying heights connected to a climbing pyramid, offering a multi-stage play experience.

The play system intergrates many elements such as climbing walls, various bridges, and several slides.

The structure is carefully designed with a jungle atmosphere including printed and engraved panels and is full of jungle adventures at every stage.

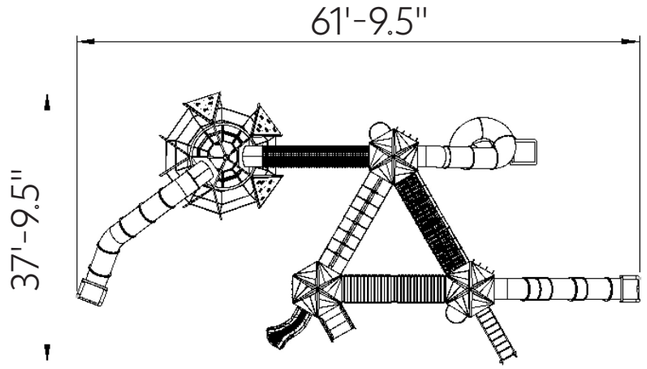

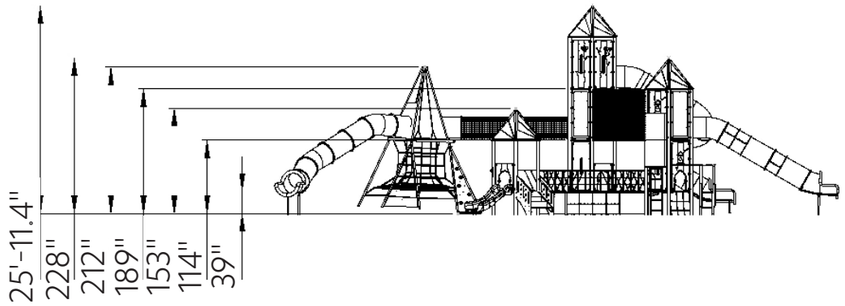

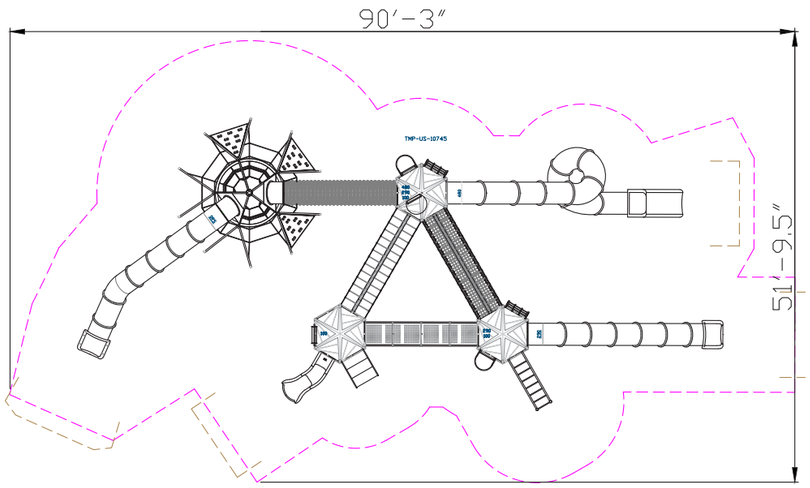





Recycled HDPE

HDPE (High-Density Polyethylene) is a recycled material made from high-density polyethylene, produced from recycled materials that allows for further recycling. It excels in resistance to UV rays and wear and tear, making it particularly suitable for use in outdoor playground equipment. Its touch is smooth and pleasant, and its appearance is maintained over time. The advantages include high resistance to harsh weather conditions and environmental preservation. The material is capable of absorbing high energy, which helps prevent fractures.



Rope Cables

Rope Cables are made of synthetic polypropylene (PP) fibers combined with a galvanized steel core for improved strength and durability. They meet strict standards, such as ASTM A240 and EN 10088, ensuring durability and safety for use in playground equipment. . The cables offer a soft and pleasant touch that does not harm the hands during use and are available in various diameters and colors, allowing for creative and aesthetic design.



Steel

Steel structure that is strong and durable, oven-painted galvanized and coated with lead-free polyester powder for corrosion and rust resistance. The steel meets strict EN 1176 standards, ensuring high quality and safety. The steel is anti-vandalistic, requires minimal maintenance, and is fully recyclable. The high-quality paint ensures weather resistance and maintains a new appearance over time.



Printed Panel

The printed panel displays images, patterns, and illustrations that stimulate imagination and encourage players to tell stories and create narratives. Playing with the panel develops creative and cognitive skills, promotes literacy, curiosity, and learning.



Rope Climbi

The rope climbing net offers a complex challenge that develops players' muscle strength, coordination, and balance. Climbing the net requires planning and forward thinking, encouraging players to overcome obstacles and develop problem-solving skills. The net allows players to experie

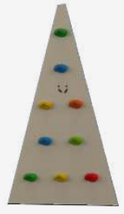

Climbing Wall

The climbing wall offers a physical challenge that develops the muscle strength, coordination and weight of the players. Climbing the wall improves their problem solving. This is a place where players overcome fears and develop courage and self-confidence.



Jungle Bridge

The jungle bridge is made of ropes in natural hues that mimic tree trunks and forest branches, giving a natural and adventurous look. The bridge is elevated, enhancing the sense of adventure and challenge as players progress along a relatively narrow strip. Playing on the jungle bridge encourages players to maintain balance and stability while moving, providing a fun and exciting experience reminiscent of walking through a wild forest.



Straight Bridge

The straight bridge allows safe and convenient passage between parts of the structure, developing players' motor skills and balance. The height effect from the ground adds a sense of adventure and challenge as players learn to maintain stability and confidence during the crossing. Playing on the bridge encourages movement and self-confidence.



Hand Walking Element

The hand-walking element strengthens upper body strength and develops coordination and balance in players. By moving using only their hands, players learn to control their movements, improve their motor skills, and strengthen their arms and shoulders. The height effect and the fact that their feet do not touch the ground add an extra dimension of challenge, requiring players to maintain balance and build self-confidence as they tackle a significant physical challenge.



Transparent Slide Sections

Transparent slide sections add an interesting visual element to slides. The transparency of the sections allows for maintaining eye contact between the companion and the player during the slide, enhancing the sense of security and comfort for both parties. The transparent sections provide a unique and enjoyable sliding experience while maintaining a sense of connection and safety.

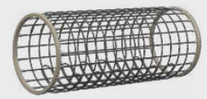

Crawl Bridge

The crawl bridge offers a physical challenge that develops players' motor skills, coordination, and balance. Positioned at a height, it adds a sense of adventure and excitement. Players crawl through the bridge, enjoying a feeling of wonder and thrill as they enter from one side and emerge from the other. Playing on the bridge encourages movement, exploration, and a sense of achievement.



Motor Development

Foot-eye coordination - Improving coordination and balance through various equipment. Hand-eye coordination - Developing coordination and precision in activities requiring fine motor skills.

Emotional Development

Imagination- Encouraging imagination and creating play worlds. Confidence- Building self-confidence and belief in one's personal abilities. Independence- Developing independence and the ability to make personal decisions. Patience- Practicing patience and waiting for one's turn.

Physical Development

Climbing - Strengthening arm and leg muscles, developing fitness and endurance Crawling - Strengthening abdominal and back muscles, improving coordination and flexibility. Balancing- Improving balance and posture. Sliding - Strengthening leg and arm muscles and improving coordination.

Cognitive Development

Spatial awareness- Improving the ability to understand and navigate space through mazes and courses.. Curiosity - Encouraging exploration and discovery through equipment providing new and unfamiliar experiences.

Social Development

Communication- Developing effective and clear communication skills with playmates Empathy- Developing empathy and the ability to understand and empathize with others' feelings. Friendship creation- Creating friendships and strengthening social bonds.