TSP-10800B1

Miami B1

Inclusive Extreme play system model Miami B1

Recycled HDPE:

Steel:

Rope Cables:

Balancing

Crawling

Climbing

Sliding

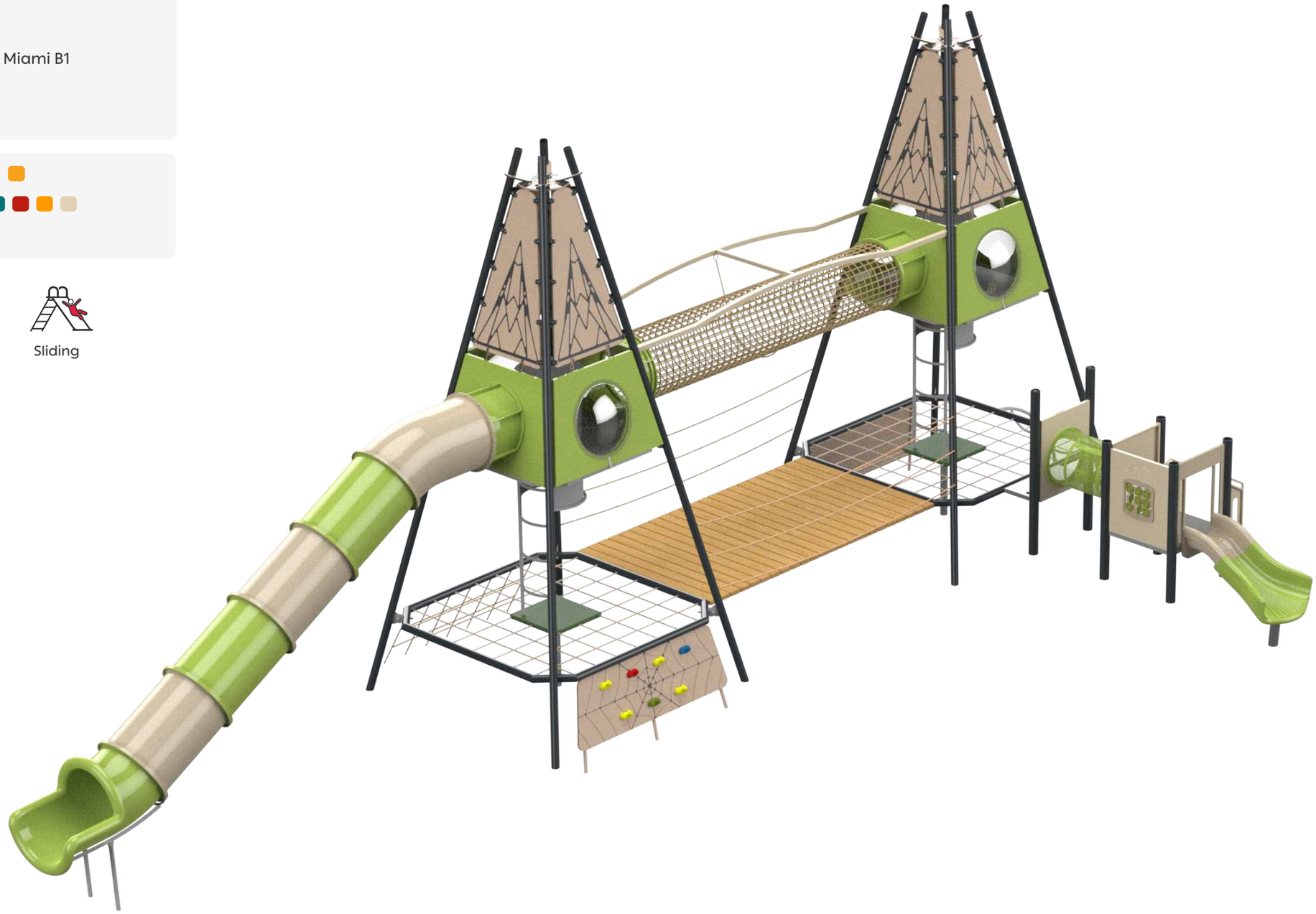

Ages 5-12

Users 92

Dimensions L: 23'-2" W: 52'-1.9" H: 19'-8.5" | L: 724 W: 1630 H: 616 cm

Safety Zone 39'-10.8"/71'-10.7" | 1214 / 2189 cm

Fall Height 9'-3.4" | 290 cm

Accessible

The Miami B1 play system includes two tall climbing pyramids, connected to each other by unique bridges, offering children a challenging and fun-filled experience.

Each pyramid is equipped with climbing walls with hand and foot holds, climbing ropes, and nets, allowing children to develop their physical fitness and balance abilities.

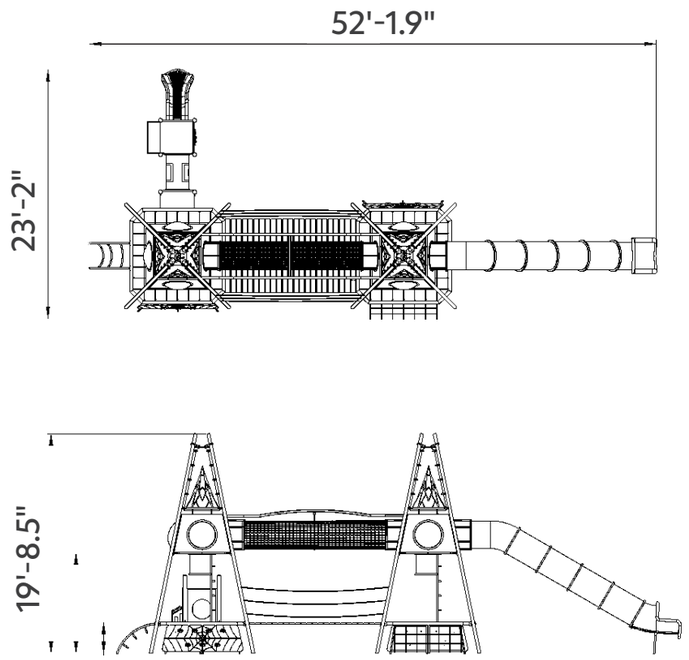

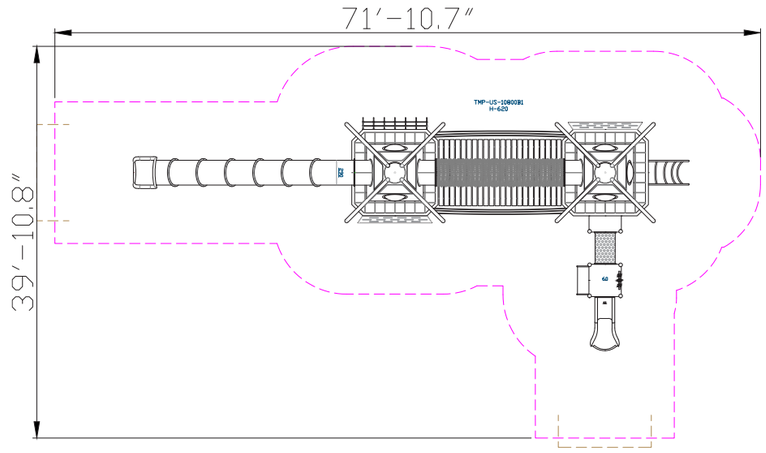





Rope Cables

Rope Cables are made of synthetic polypropylene (PP) fibers combined with a galvanized steel core for improved strength and durability. They meet strict standards, such as ASTM A240 and EN 10088, ensuring durability and safety for use in playground equipment. . The cables offer a soft and pleasant touch that does not harm the hands during use and are available in various diameters and colors, allowing for creative and aesthetic design.



Recycled HDPE

HDPE (High-Density Polyethylene) is a recycled material made from high-density polyethylene, produced from recycled materials that allows for further recycling. It excels in resistance to UV rays and wear and tear, making it particularly suitable for use in outdoor playground equipment. Its touch is smooth and pleasant, and its appearance is maintained over time. The advantages include high resistance to harsh weather conditions and environmental preservation. The material is capable of absorbing high energy, which helps prevent fractures.



Steel

Steel structure that is strong and durable, oven-painted galvanized and coated with lead-free polyester powder for corrosion and rust resistance.

The steel meets strict EN 1176 standards, ensuring high quality and safety. The steel is anti-vandalistic, requires minimal maintenance, and is fully recyclable. The high-quality paint ensures weather resistance and maintains a new appearance over time.



Accessibility Tower

The accessibility tower provides easy and safe access for players with disabilities, while maintaining a sense of adventure and fun in the structure. The tower is designed to allow everyone to enjoy safe and equal play.

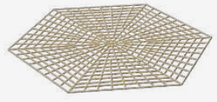

Net Floor

The net floor offers players a fascinating experience that combines stability and challenge. The floor is made of rope netting, providing a sensation of light hovering above the ground. Playing on the net floor develops balance, coordination, and self-confidence in the players.

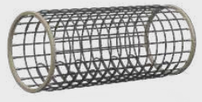

Crawl Bridge

The crawl bridge offers a physical challenge that develops players' motor skills, coordination, and balance. Positioned at a height, it adds a sense of adventure and excitement. Players crawl through the bridge, enjoying a feeling of wonder and thrill as they enter from one side and emerge from the other. Playing on the bridge encourages movement, exploration, and a sense of achievement.



Toddler Slide

The toddler slide provides a safe and enjoyable sliding experience for little ones. It develops coordination, movement, balance, and self-confidence for young players.



Climbing Wall

The climbing wall offers a physical challenge that develops the muscle strength, coordination and weight of the players. Climbing the wall improves their problem solving. This is a place where players overcome fears and develop courage and self-confidence.



Jungle Bridge

The jungle bridge is made of ropes in natural hues that mimic tree trunks and forest branches, giving a natural and adventurous look. The bridge is elevated, enhancing the sense of adventure and challenge as players progress along a relatively narrow strip. Playing on the jungle bridge encourages players to maintain balance and stability while moving, providing a fun and exciting experience reminiscent of walking through a wild forest.



Play Panel

The play panel provides a variety of interactive play options that develop players' motor and cognitive skills. Each panel offers a unique activity that stimulates thinking and encourages players to learn and discover more.



Barrel Slide

The barrel slide provides an exciting and challenging sliding experience, combining movement with a sense of adventure. Sliding in this slide develops players' motor skills and coordination as they move through the tube at varying speeds. The sliding action boosts self-confidence and encourages daring as players face the challenge of fast movement. The slide is a fundamental and important element in any playground and is considered one of the leading and most beloved attractions for players of all ages.

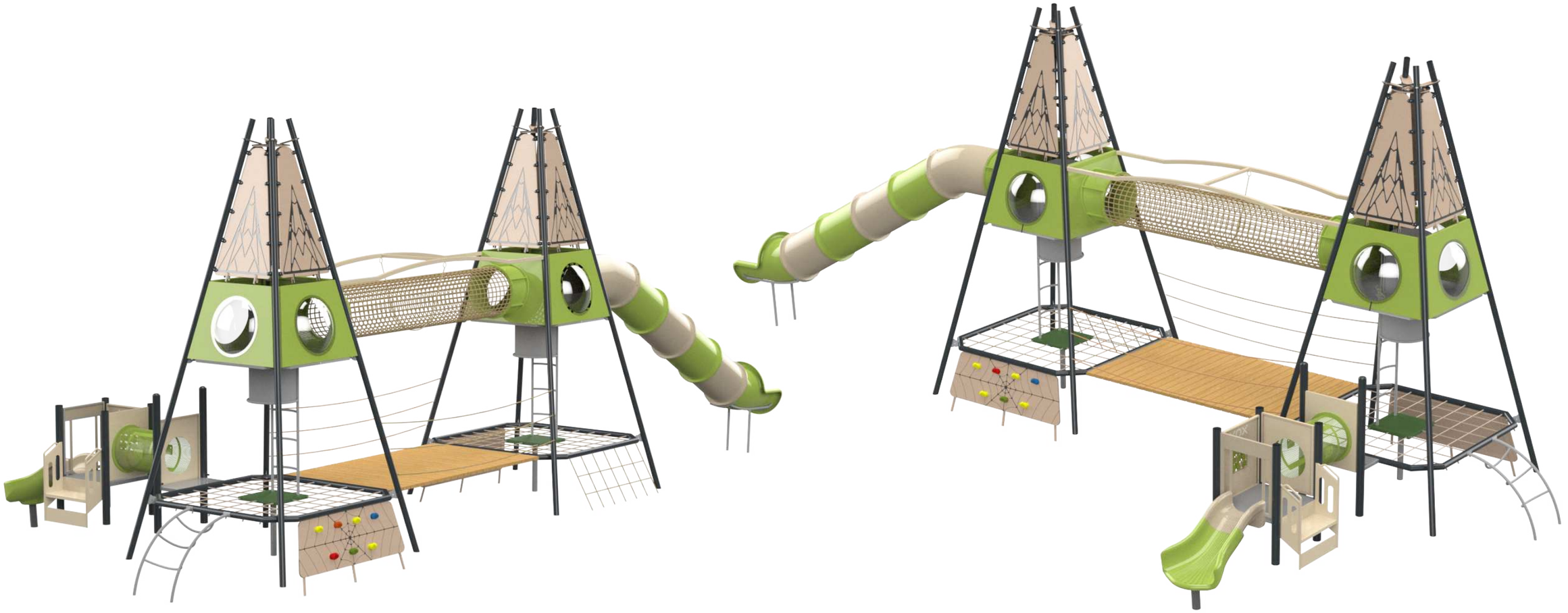

Motor Development

Foot-eye coordination - Improving coordination and balance through various equipment. Hand-eye coordination - Developing coordination and precision in activities requiring fine motor skills.

Cognitive Development

Concentration- Developing the ability to focus and maintain attention in equipment requiring concentration. Spatial awareness- Improving the ability to understand and navigate space through mazes and courses..

Emotional Development

Courage- Facing fears and new challenges. Confidence- Building self-confidence and belief in one's personal abilities. Independence- Developing independence and the ability to make personal decisions. Resilience- Coping with failure and trying again.

Social Development

Respect for boundaries- Learning the importance of respecting personal and social boundaries. Friendship creation- Creating friendships and strengthening social bonds. Respect for boundaries- Learning the importance of respecting personal and social boundaries. Friendship creation- Creating friendships and strengthening social bonds.

Physical Development

Climbing - Strengthening arm and leg muscles, developing fitness and endurance Crawling - Strengthening abdominal and back muscles, improving coordination and flexibility. Balancing- Improving balance and posture. Sliding - Strengthening leg and arm muscles and improving coordination.