TSP-10850

Beaufort

Play system model Beaufort

Rotation
Climbing
Jumping
Crawling
Hanging
Sliding



Ages 5-12
Users 120
Dimensions L: 24'-3.8" W: 25'-11" H:18'-3.6" | L: 760 W: 810 H: 572 cm
Safety Zone 47'-8.7"/46'-6.3" | 1455/ 1418 cm
Fall Height 290" | 9'-3.4" cm
Accessible

The Beaufort play system is a multi-element playground structure made from Pine wood and designed to provide an enjoyable and challenging play experience for children of all ages.

The structure includes towers, various slides, bridges, crawling tunnels, horizontal and vertical climbing ladders, and play panels incorporating interactive elements.

The towers are connected by bridges, and they are designed with wooden roofs and railings that add a sense of warmth and naturalness to the structure.

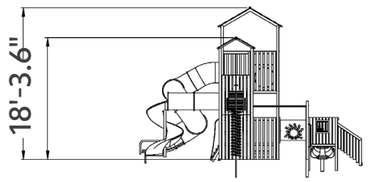

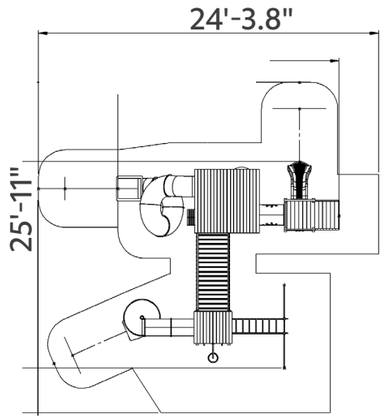

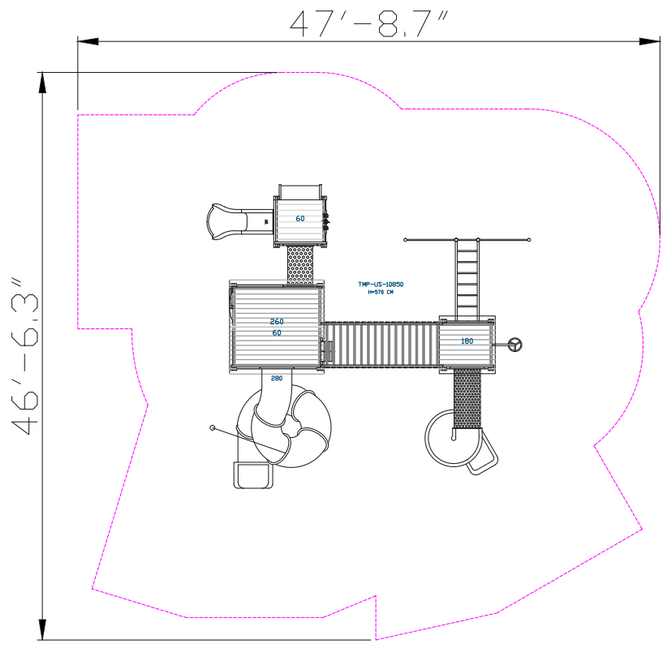







Hand Walking Element

The hand-walking element strengthens upper body strength and develops coordination and balance in players. By moving using only their hands, players learn to control their movements, improve their motor skills, and strengthen their arms and shoulders. The height effect and the fact that their feet do not touch the ground add an extra dimension of challenge, requiring players to maintain balance and build self-confidence as they tackle a significant physical challenge.



Straight Bridge

The straight bridge allows safe and convenient passage between parts of the structure, developing players' motor skills and balance. The height effect from the ground adds a sense of adventure and challenge as players learn to maintain stability and confidence during the crossing. Playing on the bridge encourages movement and self-confidence.



Climbing Element

The climbing element offers a physical challenge that develops muscle strength, coordination, and balance. Climbing on the element encourages children to overcome fears and build self-confidence and perseverance. Additionally, the element helps develop problem-solving skills as children look for efficient and safe ways to climb.



Climbing Element

The climbing element offers a physical challenge that develops muscle strength, coordination, and balance. Climbing on the element encourages children to overcome fears and build self-confidence and perseverance. Additionally, the element helps develop problem-solving skills as children look for efficient and safe ways to climb.



Slide

A slide is a fundamental and important element in any playground, considered one of the leading and most beloved attractions for players of all ages. The slide provides an enjoyable and exciting sliding experience that develops players' motor skills and coordination. Playing on the slide encourages movement, daring, and self-confidence.



Clear Bubble

The clear bubble offers a unique vantage point, allowing players to see their surroundings from a different perspective, maintaining eye contact between the companion and the player and ensuring continuous, safe communication. The clear bubble enhances the sense of security for players and companions, especially in cases of young children needing support and supervision during play.



Toddler Slide

The toddler slide provides a safe and enjoyable sliding experience for little ones. It develops coordination, movement, balance, and self-confidence for young players.

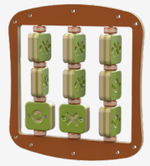

Play Panel

The play panel provides a variety of interactive play options that develop players' motor and cognitive skills. Each panel offers a unique activity that stimulates thinking and encourages players to learn and discover more.





Physical Development

Climbing - Strengthening arm and leg muscles, developing fitness and endurance. **Sliding** - Strengthening leg and arm muscles and improving coordination.

Cognitive Development

Spatial awareness- Improving the ability to understand and navigate space through mazes and courses.. **Curiosity** - Encouraging exploration and discovery through equipment providing new and unfamiliar experiences. **Creativity**- Developing creative thinking and imagination in open and interactive play.

Emotional Development

Imagination- Encouraging imagination and creating play worlds. **Courage**- Facing fears and new challenges. **Confidence**- Building self-confidence and belief in one's personal abilities. **Independence**- Developing independence and the ability to make personal decisions. **Resilience**- Coping with failure and trying again.

Social Development

Respect for boundaries- Learning the importance of respecting personal and social boundaries. **Friendship creation-** Creating friendships and strengthening social bonds.

Motor Development

Hand-eye coordination - Developing coordination and precision in activities requiring fine motor skills. Foot-eye coordination - Improving coordination and balance through various equipment.