TSP-10910E

San Francisco E

Extreme play system model San Francisco E

Recycled HDPE:

Steel:

Rope Cables:

Balancing

Rotation

Climbing

Jumping

Swinging

Crawling

Hanging

Sliding



Ages 5-12

Users 139

Dimensions L: 38'-5.6" W:60'-4.2" H:19'-1.6" | L:1202 W: 1886 H: 598 cm

Safety Zone 57'-0.9" /78'-1.0" | 2380 / 1737 cm

Fall Height9'-3.4" | 290 cm

Accessible

The San Francisco E is a combination of three structures combined as one play system:

1. A combined structure with two towers that includes elements for climbing, crawling tunnels, play panels, and slides.

2. A challenging pyramid-shaped climbing structure that includes climbing walls with hand and foot holds and a slide.

3. A challenging arched climbing structure that includes climbing and spinning elements.

The structure is suitable for games that develop imagination, physical skills, and social intelligence. It encourages curiosity and exploration, independence, spatial orientation, and stage planning.

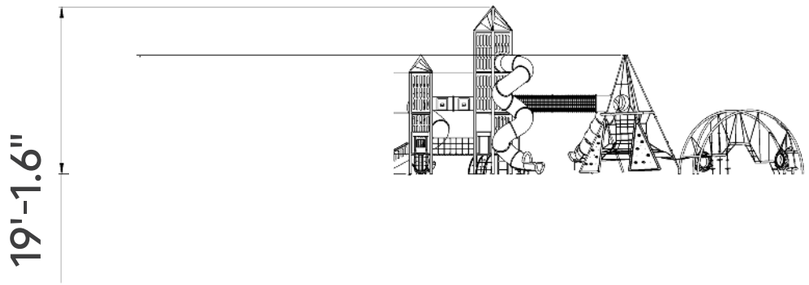

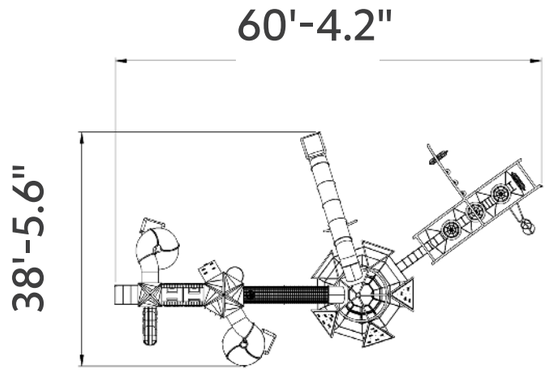





Rope Cables

Rope Cables are made of synthetic polypropylene (PP) fibers combined with a galvanized steel core for improved strength and durability. They meet strict standards, such as ASTM A240 and EN 10088, ensuring durability and safety for use in playground equipment. . The cables offer a soft and pleasant touch that does not harm the hands during use and are available in various diameters and colors, allowing for creative and aesthetic design.



Recycled HDPE

HDPE (High-Density Polyethylene) is a recycled material made from high-density polyethylene, produced from recycled materials that allows for further recycling. It excels in resistance to UV rays and wear and tear, making it particularly suitable for use in outdoor playground equipment. Its touch is smooth and pleasant, and its appearance is maintained over time. The advantages include high resistance to harsh weather conditions and environmental preservation. The material is capable of absorbing high energy, which helps prevent fractures.



Steel

Steel structure that is strong and durable, oven-painted galvanized and coated with lead-free polyester powder for corrosion and rust resistance.

The steel meets strict EN 1176 standards, ensuring high quality and safety. The steel is anti-vandalistic, requires minimal maintenance, and is fully recyclable. The high-quality paint ensures weather resistance and maintains a new appearance over time.



Straight Bridge

The straight bridge allows safe and convenient passage between parts of the structure, developing players' motor skills and balance. The height effect from the ground adds a sense of adventure and challenge as players learn to maintain stability and confidence during the crossing. Playing on the bridge encourages movement and self-confidence.



Climbing Wall

The climbing wall offers a physical challenge that develops the muscle strength, coordination and weight of the players. Climbing the wall improves their problem solving. This is a place where players overcome fears and develop courage and self-confidence.



Bird’s Nest Seat

The bird's nest seat is designed as a spacious and accommodating rope basket, allowing players to sit comfortably. It provides a sense of safety and stability during play, encouraging social interactions as players sit together and enjoy the structure.

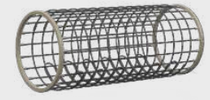

Crawl Bridge

The crawl bridge offers a physical challenge that develops players’ motor skills, coordination, and balance. Positioned at a height, it adds a sense of adventure and excitement. Players crawl through the bridge, enjoying a feeling of wonder and thrill as they enter from one side and emerge from the other. Playing on the bridge encourages movement, exploration, and a sense of achievement.



Plastic Transition Element

A play element offering a challenging transition experience that develops players' motor skills. It encourages players to use creativity and think outside the box.



Barrel Slide

The barrel slide provides an exciting and challenging sliding experience, combining movement with a sense of adventure. Sliding in this slide develops players' motor skills and coordination as they move through the tube at varying speeds. The sliding action boosts self-confidence and encourages daring as players face the challenge of fast movement. The slide is a fundamental and important element in any playground and is considered one of the leading and most beloved attractions for players of all ages.



Spinning Top

The spinning top offers an exciting and challenging spinning experience that develops players' motor skills and balance. Playing with the spinning top encourages movement, coordination, and self-confidence.

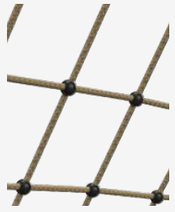

Rope Climbi

The rope climbing net offers a complex challenge that develops players' muscle strength, coordination, and balance. Climbing the net requires planning and forward thinking, encouraging players to overcome obstacles and develop problem-solving skills. The net allows players to experie





Motor Development

Hand-eye coordination - Developing coordination and precision in activities requiring fine motor skills.

Foot-eye coordination - Improving coordination and balance through various equipment.

Emotional Development

Courage- Facing fears and new challenges. **Confidence**- Building self-confidence and belief in one's personal abilities. **Independence**- Developing independence and the ability to make personal decisions. **Patience**- Practicing patience and waiting for one's turn.

Social Development

Communication- Developing effective and clear communication skills with playmates. **Empathy**- Developing empathy and the ability to understand and empathize with others' feelings. **Respect for boundaries**- Learning the importance of respecting personal and social boundaries. **Friendship creation**- Creating friendships and strengthening social bonds.

Physical Development

Climbing - Strengthening arm and leg muscles, developing fitness and endurance. **Crawling** - Strengthening abdominal and back muscles, improving coordination and flexibility. **Swinging** - Strengthening core muscles and enhancing the sense of movement. **Spinning** - Improving balance and vestibular functions through carousels.

Cognitive Development

Concentration- Developing the ability to focus and maintain attention in equipment requiring concentration.

Spatial awareness- Improving the ability to understand and navigate space through mazes and courses..