TSP-10963E

Richmond E

Play system model Richmond E story themed

Recycled HDPE:

Steel:

Polycarbonate:

Balancing

Sliding

Climbing

Jumping



Ages 5-12

Users 83

Dimensions L: 32'-10" W: 26'-8.3" H: 18'-2.9" | L: 1026 W: 834 H: 570 cm

Safety Zone 48'-3.1"/46'-6.1" | 1471 / 1417 cm

Fall Height 9'-3.4" | 290 cm

Accessible

The Richmond E is a uniquely designed play system that incorporates prints from any beloved book. The structure includes a wide building with multiple levels, various elements for climbing, play, and sliding.

The literary design encourages imaginative play and adventures inspired by the characters and plots, while developing physical skills such as strength, balance, and coordination. Richmond E is suitable for children of various ages and serves as a prominent attraction in playgrounds.

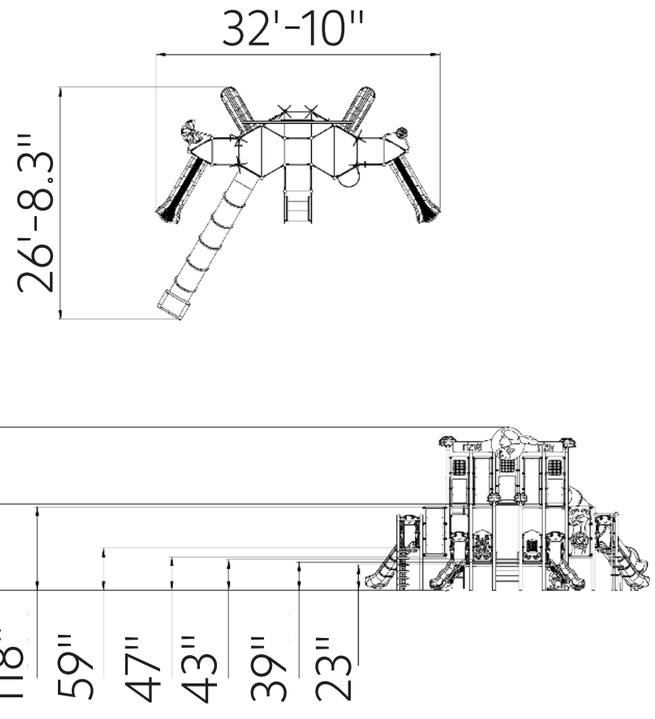

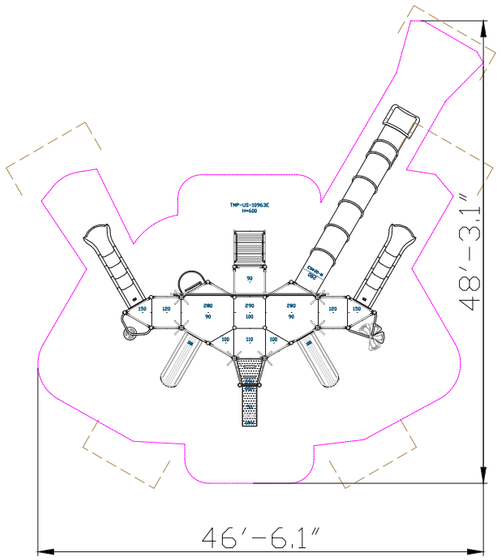





Recycled HDPE

HDPE (High-Density Polyethylene) is a recycled material made from high-density polyethylene, produced from recycled materials that allows for further recycling. It excels in resistance to UV rays and wear and tear, making it particularly suitable for use in outdoor playground equipment. Its touch is smooth and pleasant, and its appearance is maintained over time. The advantages include high resistance to harsh weather conditions and environmental preservation. The material is capable of absorbing high energy, which helps prevent fractures.



Steel

Steel structure that is strong and durable, oven-painted galvanized and coated with lead-free polyester powder for corrosion and rust resistance. The steel meets strict EN 1176 standards, ensuring high quality and safety. The steel is anti-vandalistic, requires minimal maintenance, and is fully recyclable. The high-quality paint ensures weather resistance and maintains a new appearance over time.



Printed Panel

The printed panel displays images, patterns, and illustrations that stimulate imagination and encourage players to tell stories and create narratives. Playing with the panel develops creative and cognitive skills, promotes literacy, curiosity, and learning.

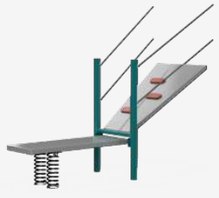

Springy Mat

The springy mat encourages players to jump and move. Playing on the springy mat develops players' strength, coordination, and balance.



Designed Climbing Element

The designed climbing element combines physical challenge with a unique and inviting design. Players develop physical skills such as strength, coordination, and balance while playing in a creative and designed environment. The unique design encourages players to play and explore, fostering their imagination and creativity.



Overlays

Unique and designed visual elements that enhance the overall appearance of the structure. The overlays are durable and add an extra layer of creativity and enriching play experience for players.

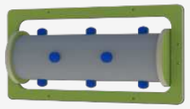

Play Panel

The play panel provides a variety of interactive play options that develop players' motor and cognitive skills. Each panel offers a unique activity that stimulates thinking and encourages players to learn and discover more.



Barrel Slide

The barrel slide provides an exciting and challenging sliding experience, combining movement with a sense of adventure. Sliding in this slide develops players' motor skills and coordination as they move through the tube at varying speeds. The sliding action boosts self-confidence and encourages daring as players face the challenge of fast movement. The slide is a fundamental and important element in any playground and is considered one of the leading and most beloved attractions for players of all ages.



Climbing Wall

The climbing wall offers a physical challenge that develops the muscle strength, coordination and weight of the players. Climbing the wall improves their problem solving. This is a place where players overcome fears and develop courage and self-confidence.



Fall Guard

The fall guard provides additional protection in areas where there is a risk of climbing and falling.





Sensory Development

Vision development- Rich visual experiences through vibrant colors and shapes.

Cognitive Development

Spatial awareness- Improving the ability to understand and navigate space through mazes and courses.. Curiosity - Encouraging exploration and discovery through equipment providing new and unfamiliar experiences.

Emotional Development

Imagination- Encouraging imagination and creating play worlds. Confidence- Building self-confidence and belief in one's personal abilities. Independence- Developing independence and the ability to make personal decisions. Empathy- Developing the ability to understand and accept differences and complexities.

Social Development

Communication- Developing effective and clear communication skills with playmates Empathy- Developing empathy and the ability to understand and empathize with others' feelings. Friendship creation- Creating friendships and strengthening social bonds.

Physical Development

Climbing - Strengthening arm and leg muscles, developing fitness and endurance Sliding - Strengthening leg and arm muscles and improving coordination. Jumping- Improving leg strength and balance. Balancing- Improving balance and posture.