TSP-10970

Stockton

Extreme stainless steel play system model Stockton

Recycled HDPE:

Rope Cables:

Balancing

Climbing

Hanging

Sliding



Ages 5-12

Users 11

Dimensions L: 7'-8.9" W: 13'-11" H: 13'-6.4" | L: 242 W: 435 H: 423 cm

Safety Zone 19'-3.8"/24'-7.7" | 587 / 749 cm

Fall Height 5'-76" | 180 cm

The Stockton is a challenging play system made of stainless steel and HDPE. The surface can be reached via a ladder, climbing walls, or slides. Suitable for challenging climbing and sliding games.

Develops courage, arm and leg muscles, and balance.

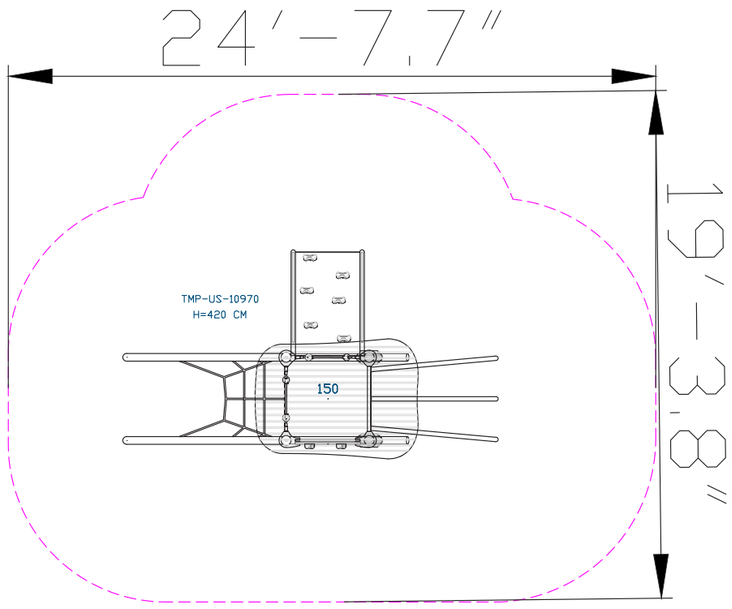





Recycled HDPE

HDPE (High-Density Polyethylene) is a recycled material made from high-density polyethylene, produced from recycled materials that allows for further recycling. It excels in resistance to UV rays and wear and tear, making it particularly suitable for use in outdoor playground equipment. Its touch is smooth and pleasant, and its appearance is maintained over time. The advantages include high resistance to harsh weather conditions and environmental preservation. The material is capable of absorbing high energy, which helps prevent fractures.



Stainless Steel 316

Stainless Steel 316 is an alloy of iron, chromium, nickel, and molybdenum, providing exceptional resistance to corrosion, rust, and stains. It meets strict playground equipment standards such as ASTM A240 and EN 10088, offering a smooth touch and shiny appearance. Particularly suitable for use in coastal and humid areas, and industrial and urban environments. Even in these challenging areas, Stainless Steel 316 maintains a clean and shiny appearance over time.Steel 316 maintains a clean and shiny appearance over time.



Rope Cables

Rope Cables are made of synthetic polypropylene (PP) fibers combined with a galvanized steel core for improved strength and durability. They meet strict standards, such as ASTM A240 and EN 10088, ensuring durability and safety for use in playground equipment. . The cables offer a soft and pleasant touch that does not harm the hands during use and are available in various diameters and colors, allowing for creative and aesthetic design.



Slide Boards

The slide boards provide an exciting sliding experience that combines fast movement and fun, and they also offer a challenging climbing option that develops players' motor skills and balance. Playing on the slide boards encourages players to take risks and improve their body control skills.



Climbing Wall

The climbing wall offers a physical challenge that develops the muscle strength, coordination and weight of the players. Climbing the wall improves their problem solving. This is a place where players overcome fears and develop courage and self-confidence.



Rubber Hills

The roof provides shade and protection from the sun and rain, allowing players to enjoy play in comfortable conditions. In addition to its functional role, the roof is designed to enhance the look of the structure and align with the story told by the design of the play structure. The roof design contributes to creating an engaging and unique play environment that stimulates imagination and enriches the players' play experience.



Clear Bubble

The clear bubble offers a unique vantage point, allowing players to see their surroundings from a different perspective, maintaining eye contact between the companion and the player and ensuring continuous, safe communication. The clear bubble enhances the sense of security for players and companions, especially in cases of young children needing support and supervision during play.



Decorations and Accessories

Decorations and accessories adorn the structures and highlight the theme of the playground. They encourage players to use their imagination and creativity during play.



Hand and Foot Holds

Hand and foot holds provide support during play and use of the structure. Players develop their strength and coordination while maintaining stability and security.

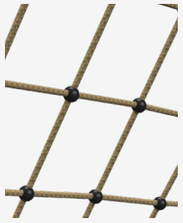

Rope Climbi

The rope climbing net offers a complex challenge that develops players' muscle strength, coordination, and balance. Climbing the net requires planning and forward thinking, encouraging players to overcome obstacles and develop problem-solving skills. The net allows players to experie



Climbing Wall

The climbing wall offers a physical challenge that develops the muscle strength, coordination and weight of the players. Climbing the wall improves their problem solving. This is a place where players overcome fears and develop courage and self-confidence.



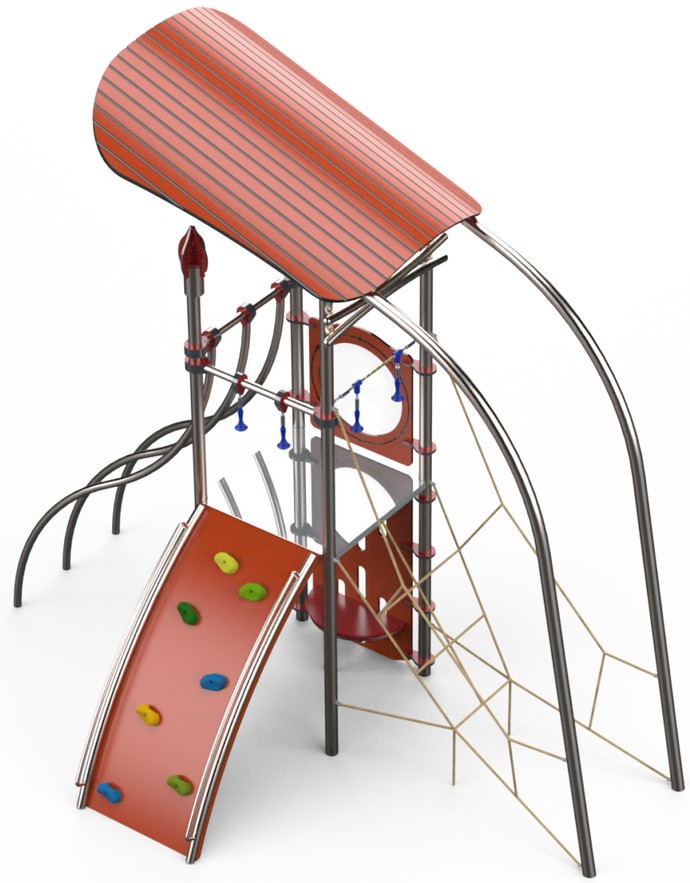

Motor Development

Foot-eye coordination - Improving coordination and balance through various equipment. Hand-eye coordination - Developing coordination and precision in activities requiring fine motor skills.

Cognitive Development

Concentration- Developing the ability to focus and maintain attention in equipment requiring concentration.

Physical Development

Climbing - Strengthening arm and leg muscles, developing fitness and endurance Balancing- Improving balance and posture. Hanging - Strengthening arm, back, and shoulder muscles. Sliding - Strengthening leg and arm muscles and improving coordination.