TSP-3405

Balance Cables

Challenging ropes structure model Balance Cables

The Balance Cable is a challenging structure consisting of cables stretched between poles, designed to develop and improve users balance and coordination. Children are required to walk on the lower cables while relying on the upper cables for support. The equipment provides a challenging and enjoyable experience that requires concentration and control of body movements. It's suitable for children and youth and integrates well into challenge courses in playgrounds.

Rope Cables:

Steel:

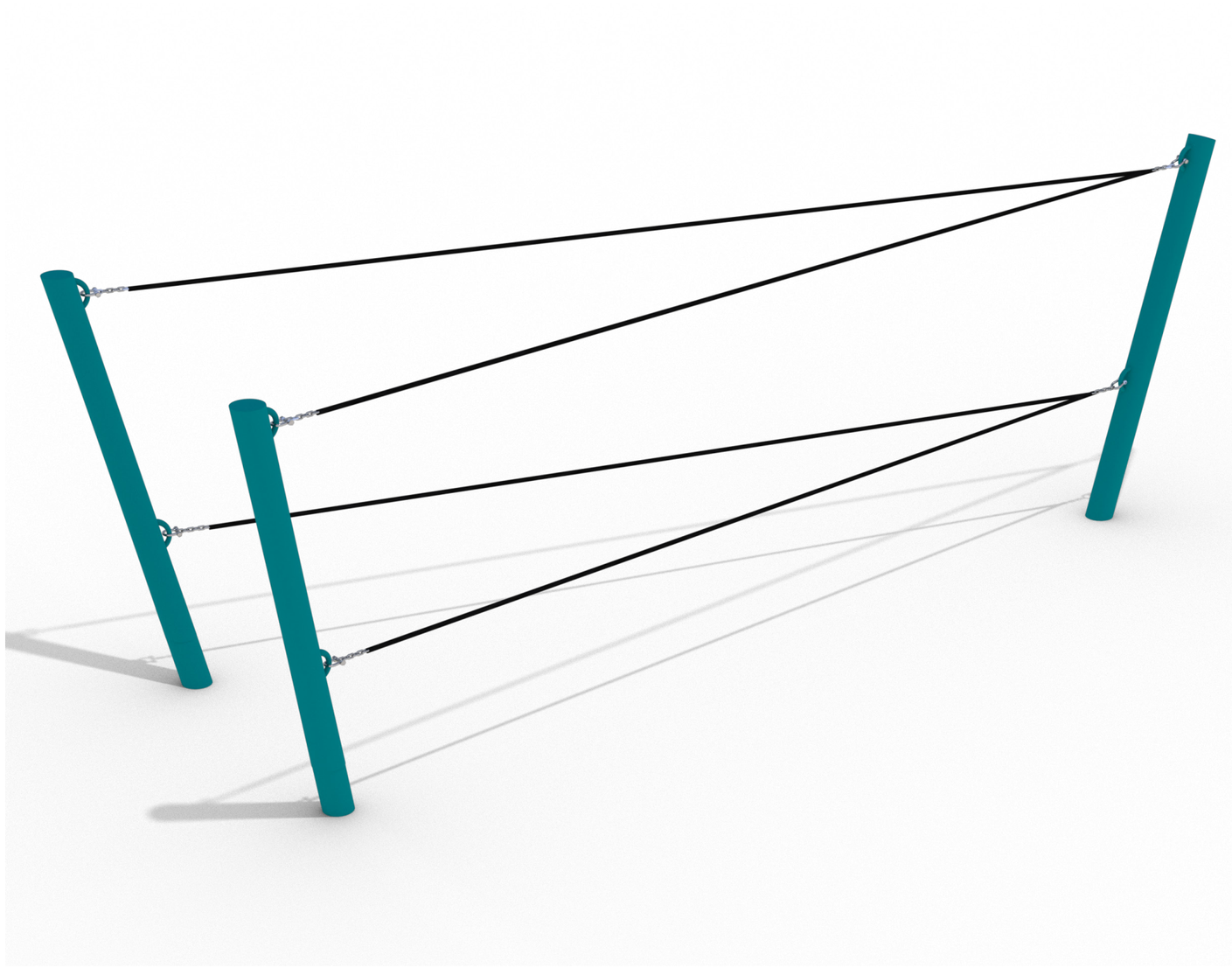



Ages 5-12 | Users 4 | Dimensions L: 5'-3.7" W: 15'-3.9" H: 0-0" | cm L: 166 W: 479 H: 162 | Safety Zone 18'-3.9"/28'-5.6" | cm 556.26 / 866.14 | Fall Height 1.6' | 50 cm | Accessible

Motor Development

Foot-eye coordination - Improving coordination and balance through various equipment.

Physical Development

Balancing- Improving balance and posture.

Emotional Development

Courage- Facing fears and new challenges. Confidence- Building self-confidence and belief in one's personal abilities. Independence- Developing independence and the ability to make personal decisions. Patience- Practicing patience and waiting for one's turn. Resilience- Coping with failure and trying again. Perseverance- Encouraging perseverance and repeated attempts.

Cognitive Development

Concentration- Developing the ability to focus and maintain attention in equipment requiring concentration. Regulation of force- Developing the ability to apply the right amount of force according to the activity.

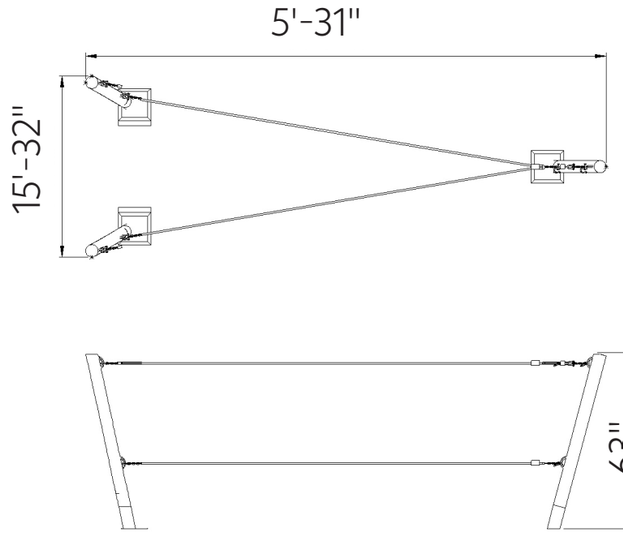



Rope Cables

Rope Cables are made of synthetic polypropylene (PP) fibers combined with a galvanized steel core for improved strength and durability. They meet strict standards, such as ASTM A240 and EN 10088, ensuring durability and safety for use in playground equipment. . The cables offer a soft and pleasant touch that does not harm the hands during use and are available in various diameters and colors, allowing for creative and aesthetic design.



Steel

Steel structure that is strong and durable, oven-painted galvanized and coated with lead-free polyester powder for corrosion and rust resistance. The steel meets strict EN 1176 standards, ensuring high quality and safety. The steel is anti-vandalistic, requires minimal maintenance, and is fully recyclable. The high-quality paint ensures weather resistance and maintains a new appearance over time.

Hand and Foot Holds

Hand and foot holds provide support during play and use of the structure. Players develop their strength and coordination while maintaining stability and security.

