TSP-4101

Beresheet

Challenging jumping structure model Beresheet designed after Israel's first lunar mission

Steel:

Rope Cables:

Climbing

Jumping

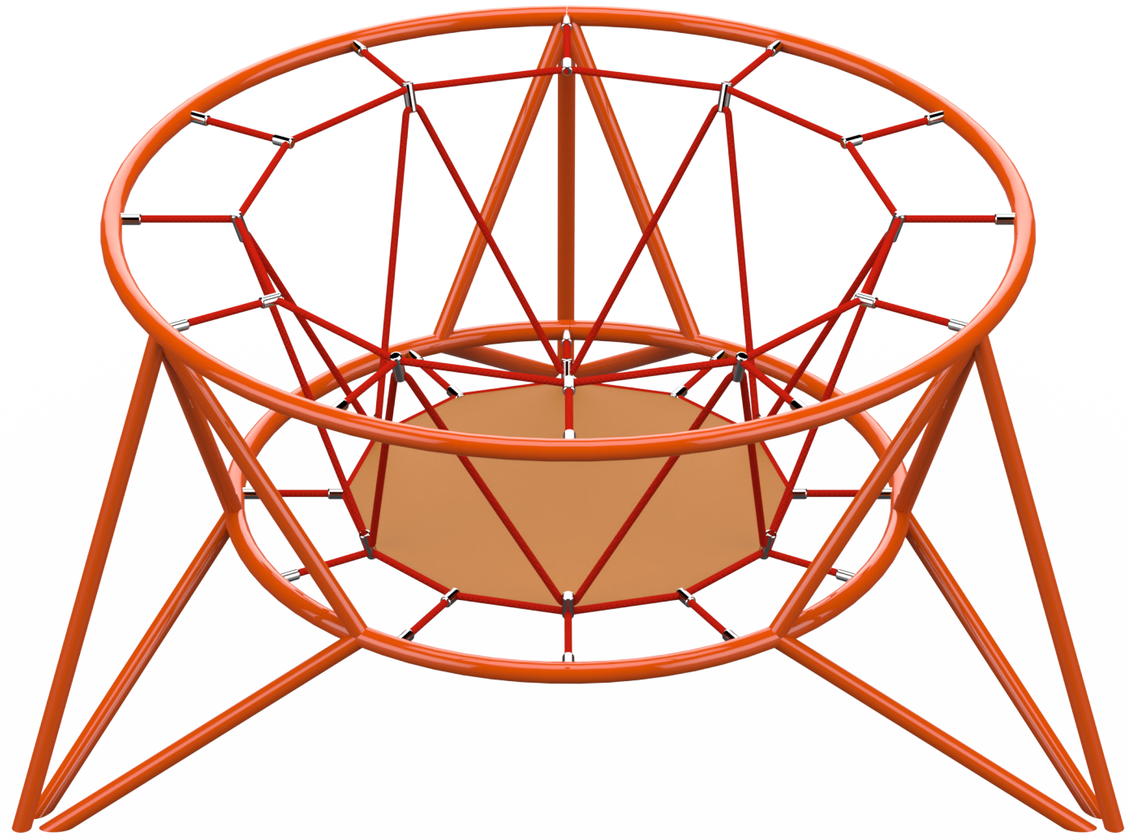

Motor Development

Core muscle strengthening- Strengthening abdominal and back muscles through challenging equipment. Foot-eye coordination - Improving coordination and balance through various equipment. Hand-eye coordination - Developing coordination and precision in activities .requiring fine motor skills

Physical Development

Climbing - Strengthening arm and leg muscles, developing fitness and endurance Jumping- Improving leg .strength and balance

Ages 5-12

Users 10

Dimensions L: 16'-1.9" W: 16'-1.9" H: 3'-10.5" | cm L: 245 W: 245 H: 121

Safety Zone R21'-3.7" | cm R647.7

Fall Height 4.16' | 130 cm

Accessible

This jumping structure is inspired by the first Israeli spacecraft, Beresheet. Made of steel, cables, and rubber sheets, it is designed for both jumping and walking, simulating walking on the moon.

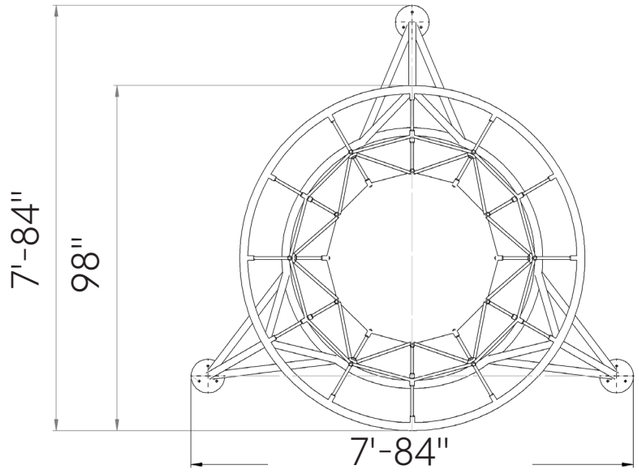

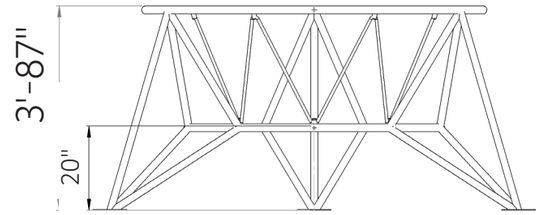

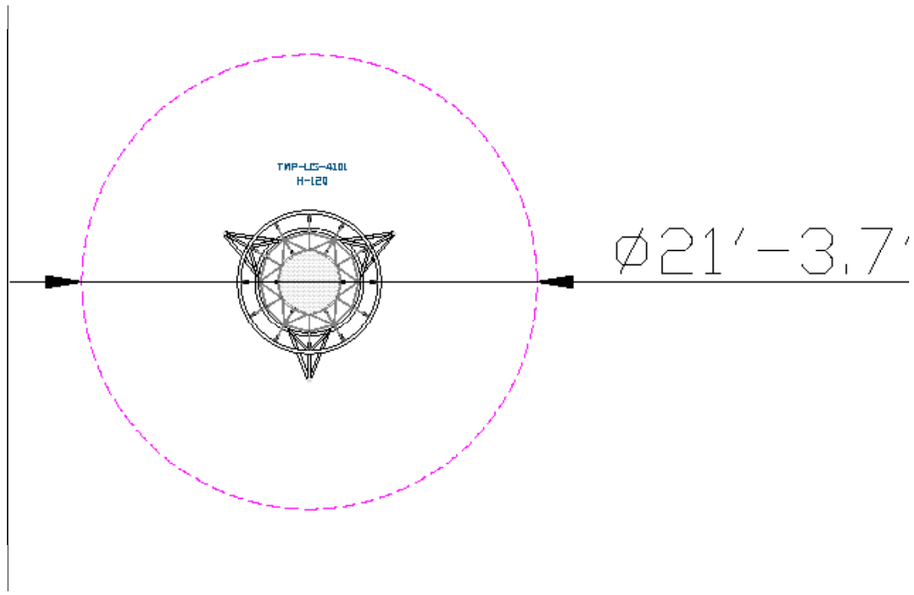





Rope Cables

Rope Cables are made of synthetic polypropylene (PP) fibers combined with a galvanized steel core for improved strength and durability. They meet strict standards, such as ASTM A240 and EN 10088, ensuring durability and safety for use in playground equipment. . The cables offer a soft and pleasant touch that does not harm the hands during use and are available in various diameters and colors, allowing for creative and aesthetic design.



Steel

Steel structure that is strong and durable, oven-painted galvanized and coated with lead-free polyester powder for corrosion and rust resistance. The steel meets strict EN 1176 standards, ensuring high quality and safety. The steel is anti-vandalistic, requires minimal maintenance, and is fully recyclable. The high-quality paint ensures weather resistance and maintains a new appearance over time.