TSP-4652

The Warren

Challenging structure model The Warren

Steel:

Rope Cables:

Rotation

Balancing

Hanging

Climbing

Jumping

Sliding

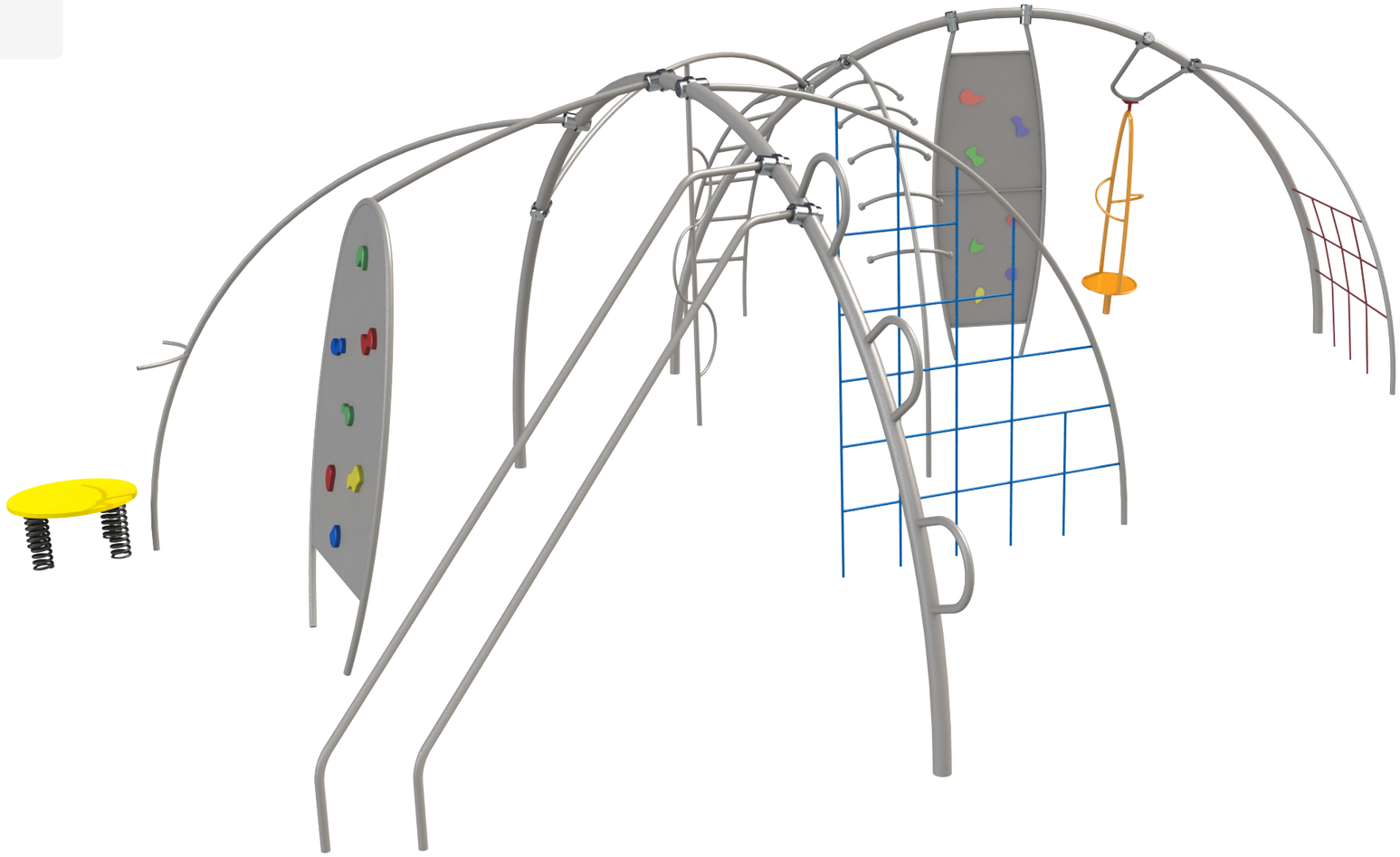

Ages 5-12

Users 25

Dimensions L: 28'-0.8" W: 41'-10.3" H: 9'-11.4" | cm L: 877 W: 1308 H: 311

Safety Zone 43'-1.4"/58'-10.6" | cm 1313.18 / 1793.24

Fall Height 9.6' | 300 cm

Accessible

The Warren structure features central arches from which a variety of exciting elements emerge, including different types of ladders, climbing walls, cables, aerial handholds, a sloped spinner, a spring surface, and a sleek slide. Its design is both modern and sophisticated, marked by clean, rounded lines. The structure offers a challenging environment designed to strengthen muscles, build confidence, and develop crucial skills for navigating risky and complex situations.

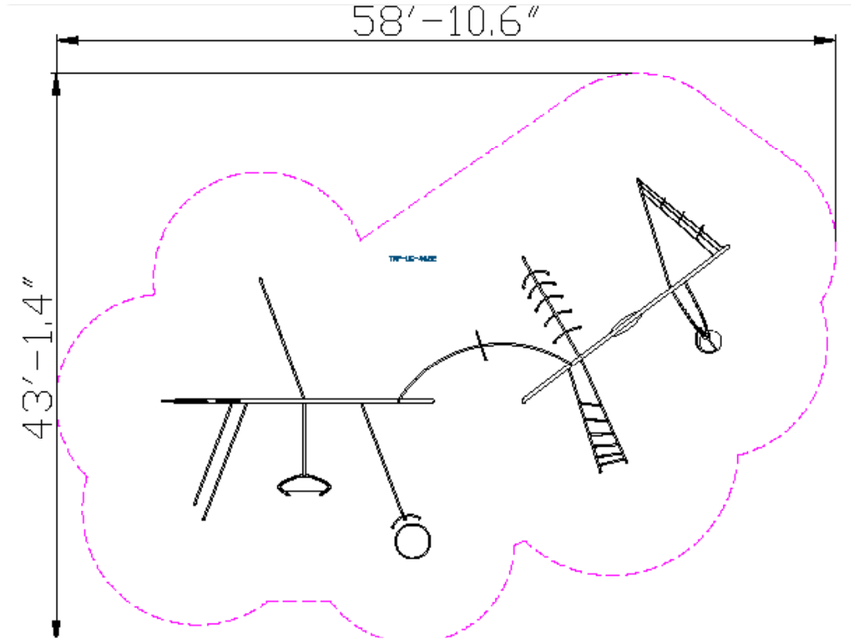





Stainless Steel 316

Stainless Steel 316 is an alloy of iron, chromium, nickel, and molybdenum, providing exceptional resistance to corrosion, rust, and stains. It meets strict playground equipment standards such as ASTM A240 and EN 10088, offering a smooth touch and shiny appearance. Particularly suitable for use in coastal and humid areas, and industrial and urban environments. Even in these challenging areas, Stainless Steel 316 maintains a clean and shiny appearance over time.Steel 316 maintains a clean and shiny appearance over time.



Rope Cables

Rope Cables are made of synthetic polypropylene (PP) fibers combined with a galvanized steel core for improved strength and durability. They meet strict standards, such as ASTM A240 and EN 10088, ensuring durability and safety for use in playground equipment. . The cables offer a soft and pleasant touch that does not harm the hands during use and are available in various diameters and colors, allowing for creative and aesthetic design.



Climbing Wall

The climbing wall offers a physical challenge that develops the muscle strength, coordination and weight of the players. Climbing the wall improves their problem solving. This is a place where players overcome fears and develop courage and self-confidence.



Springy Mat

The springy mat encourages players to jump and move. Playing on the springy mat develops



Slide Boards

The slide boards provide an exciting sliding experience that combines fast movement and fun, and they also offer a challenging climbing option that develops players' motor skills and balance. Playing on the slide boards encourages players to take risks and improve their body control skills.



Rope Ladder

The rope ladder provides vertical access to the play structure and encourages players to develop physical skills such as strength, coordination, and balance. Climbing the rope ladder strengthens hand and leg muscles and develops a sense of balance. The ladder encourages players to face challenges and develop flexibility and agility.

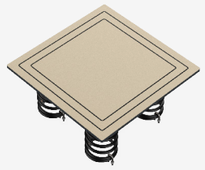

Springy Mat

The springy mat encourages players to jump and move. Playing on the springy mat develops players' strength, coordination, and balance.



Ladder

The ladder provides vertical access to the play structure and encourages players to develop physical skills such as strength, coordination, and balance. Climbing the ladder promotes courage and independence as players face heights and new challenges. The ladder strengthens hand and arm muscles and encourages proper body use.

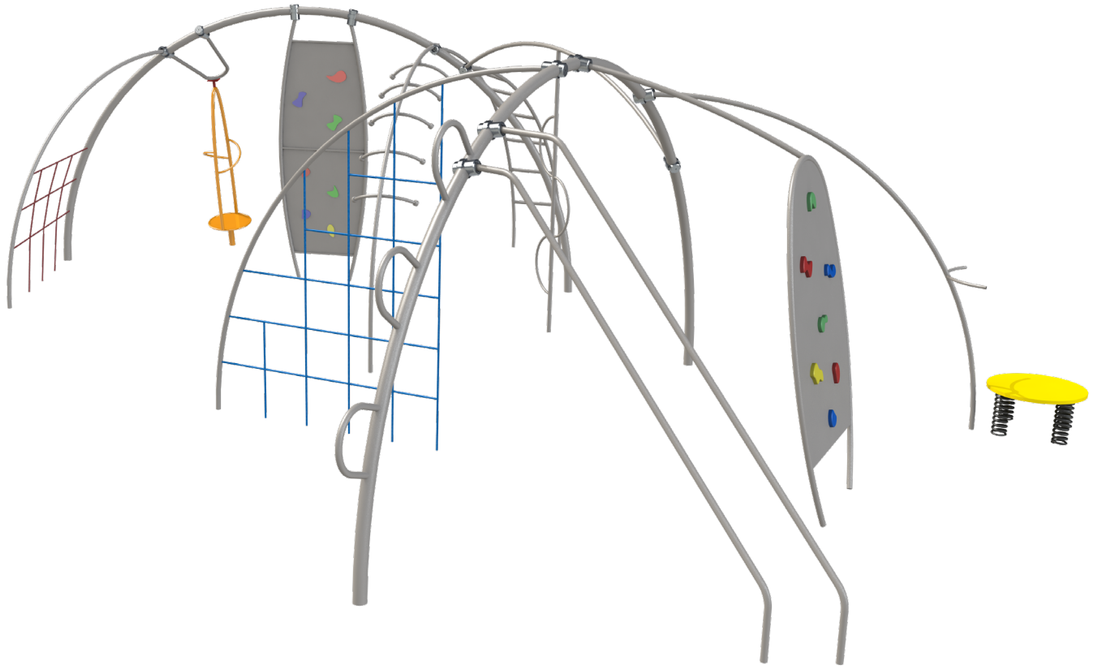

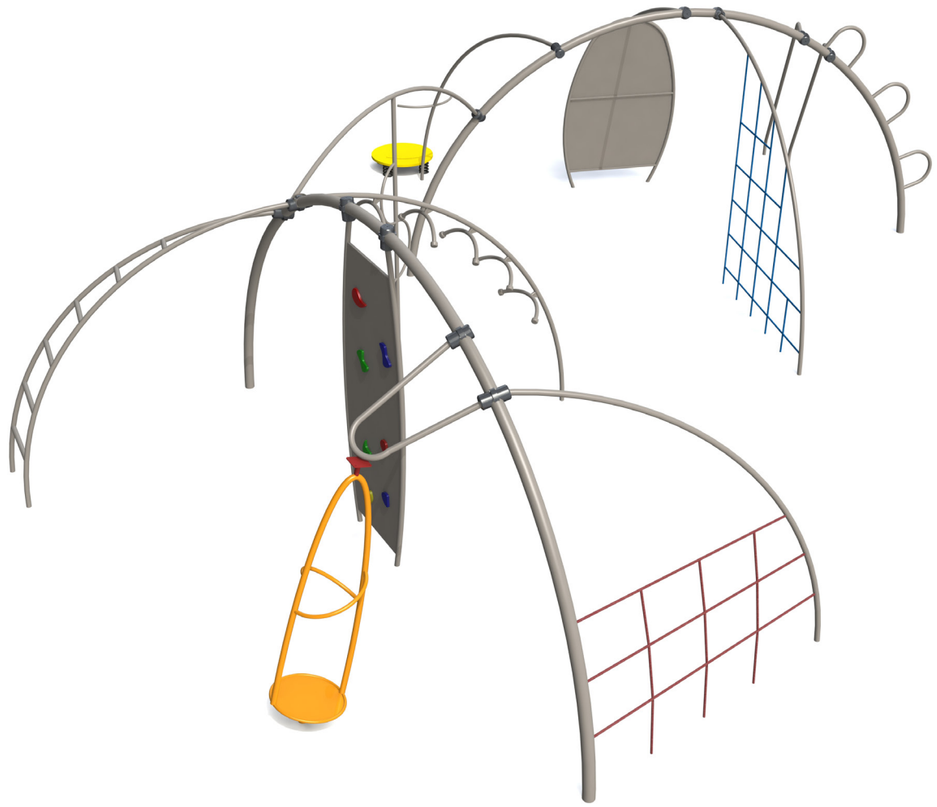

Motor Development

Core muscle strengthening- Strengthening abdominal and back muscles through challenging equipment. Foot-eye coordination - Improving coordination and balance through various equipment. Hand-eye coordination - Developing coordination and precision in activities requiring fine motor skills.

Cognitive Development

Concentration- Developing the ability to focus and maintain attention in equipment requiring concentration. Spatial awareness- Improving the ability to understand and navigate space through mazes and courses..

Emotional Development

Courage- Facing fears and new challenges. Confidence- Building self-confidence and belief in one's personal abilities. Independence- Developing independence and the ability to make personal decisions. Resilience- Coping with failure and trying again. Perseverance- Encouraging perseverance and repeated attempts. Achievement- Developing a sense of accomplishment and satisfaction from success in challenging equipment.

Social Development

Empathy- Developing empathy and the ability to understand and empathize with others' feelings. Respect for boundaries- Learning the importance of respecting personal and social boundaries. Friendship creation- Creating friendships and strengthening social bonds. Empathy- Developing empathy and the ability to understand and empathize with others' feelings. Respect for boundaries- Learning the importance of respecting personal and social boundaries. Friendship creation- Creating friendships and strengthening social bonds.

Physical Development

Climbing - Strengthening arm and leg muscles, developing fitness and endurance Hanging - Strengthening arm, back, and shoulder muscles. Balancing- Improving balance and posture. Jumping- Improving leg strength and balance. Spinning - Improving balance and vestibular functions through carousels. Sliding - Strengthening leg and arm muscles and improving coordination.