TSP-4663

The Snake

Challenging structure model The Snake

Steel:

Rope Cables:

Rotation

Balancing

Swinging

Hanging

Crawling

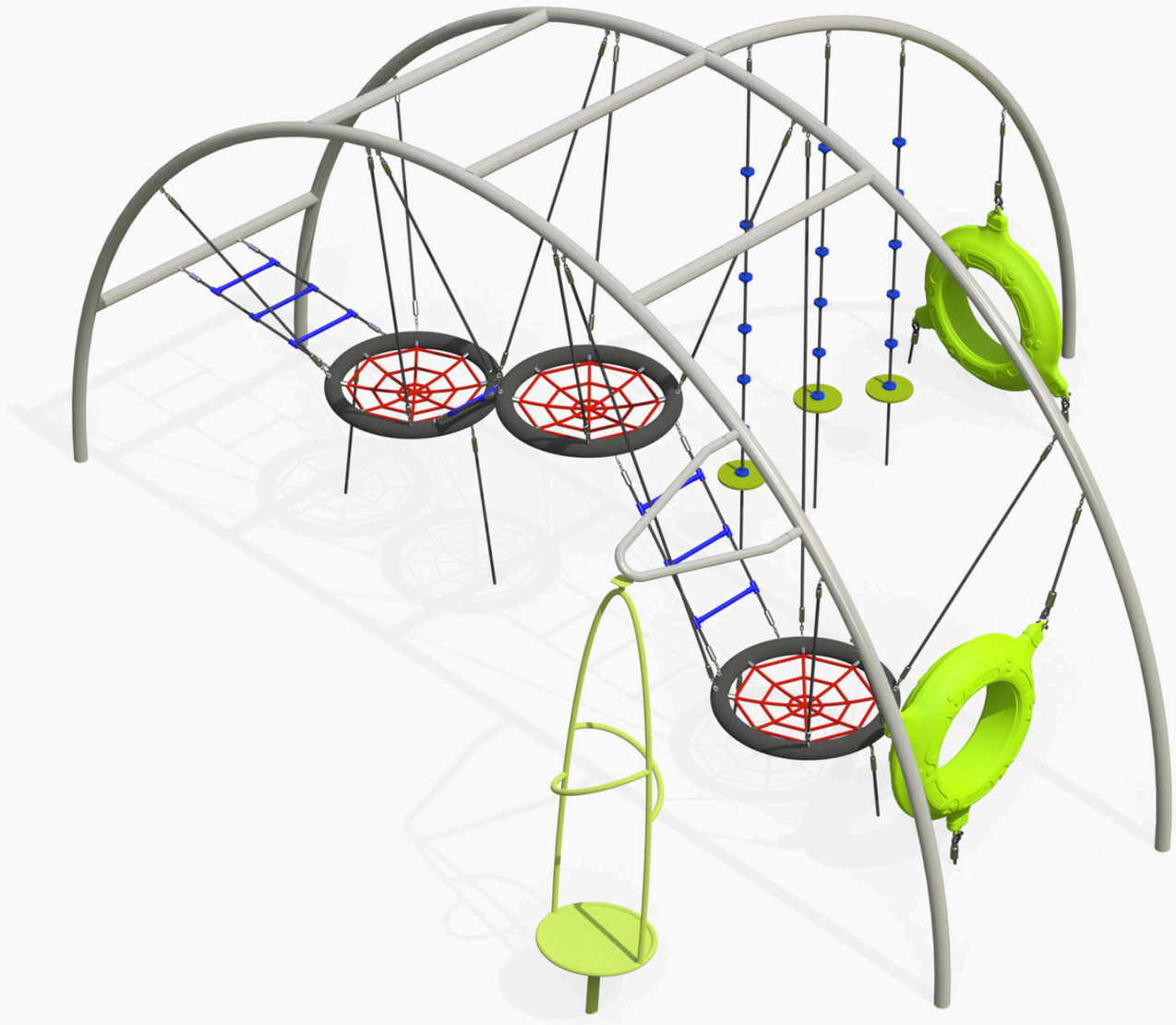

Ages 5-12

Users 23

Dimensions L: 18'-7.5" W: 19'-7" H: 9'-8.7" | cm L: 582 W: 612 H: 304

Safety Zone 29'-11.4"/34'-0.9" | cm 911.86 / 1036.32

Fall Height 8.96' | 280 cm

Accessible

The Snake is a challenging structure that has a variety of exciting elements extend from it, including different types of ladders, climbing cables, plastic rings, and an inclined spinner. The modular design allows movement between different elements which are challenging and invigorating, helping to strengthen muscles, confront fears, and develop abilities to cope with risky and complex situations. It is suitable for children of various ages and is designed for individual or group play.

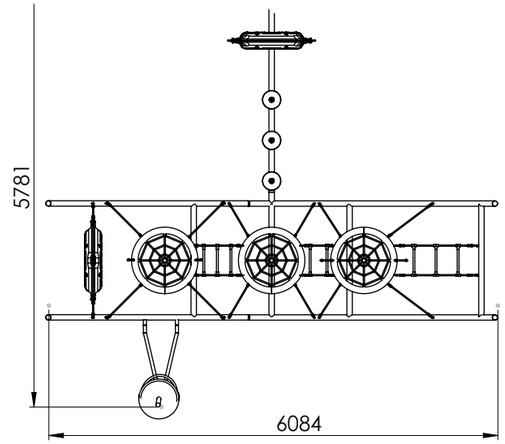

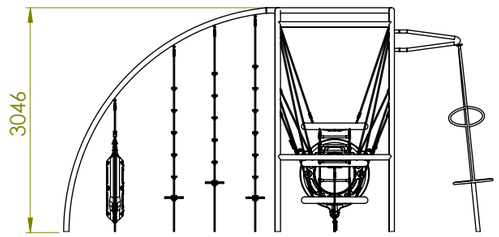

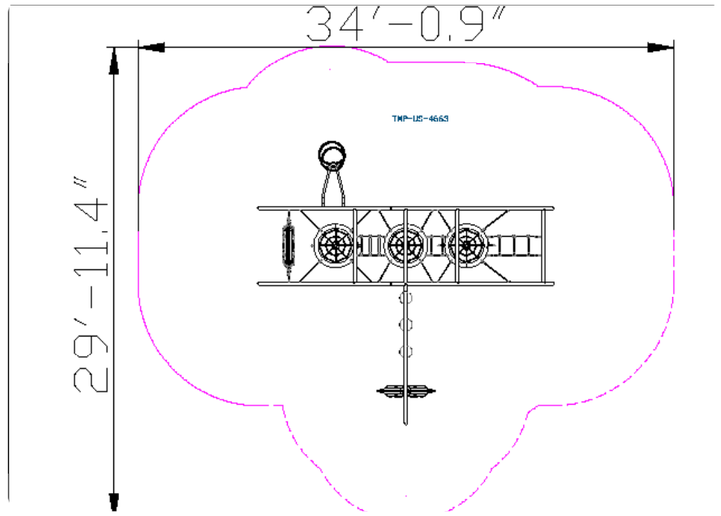





Steel

Steel structure that is strong and durable, oven-painted galvanized and coated with lead-free polyester powder for corrosion and rust resistance. The steel meets strict EN 1176 standards, ensuring high quality and safety. The steel is anti-vandalistic, requires minimal maintenance, and is fully recyclable. The high-quality paint ensures weather resistance and maintains a new appearance over time.



Rope Cables

Rope Cables are made of synthetic polypropylene (PP) fibers combined with a galvanized steel core for improved strength and durability. They meet strict standards, such as ASTM A240 and EN 10088, ensuring durability and safety for use in playground equipment. . The cables offer a soft and pleasant touch that does not harm the hands during use and are available in various diameters and colors, allowing for creative and aesthetic design.

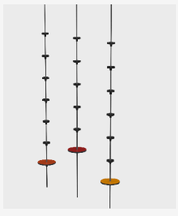

Designed Climbing Element

The designed climbing element combines physical challenge with a unique and inviting design. Players develop physical skills such as strength, coordination, and balance while playing in a creative and designed environment. The unique design encourages players to play and explore, fostering their imagination and creativity.



Plastic Transition Element

A play element offering a challenging transition experience that develops players' motor skills. It encourages players to use creativity and think outside the box.



Springy Mat

The springy mat encourages players to jump and move. Playing on the springy mat develops



Spinning Top

The spinning top offers an exciting and challenging spinning experience that develops players' motor skills and balance. Playing with the spinning top encourages movement, coordination, and self-confidence.



Ladder

The ladder provides vertical access to the play structure and encourages players to develop physical skills such as strength, coordination, and balance. Climbing the ladder promotes courage and independence as players face heights and new challenges. The ladder strengthens hand and arm muscles and encourages proper body use.



Ladder

The ladder provides vertical access to the play structure and encourages players to develop physical skills such as strength, coordination, and balance. Climbing the ladder promotes courage and independence as players face heights and new challenges. The ladder strengthens hand and arm muscles and encourages proper body use.



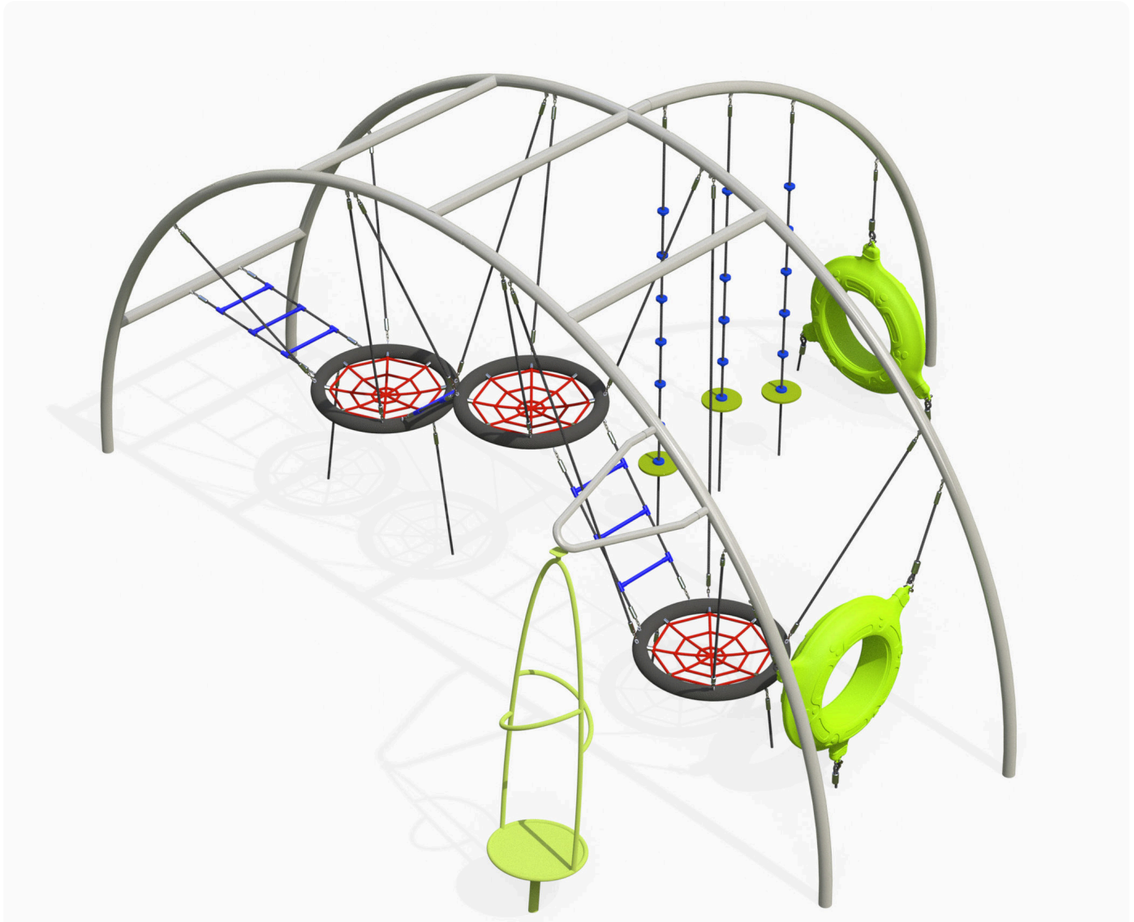

Motor Development

Core muscle strengthening- Strengthening abdominal and back muscles through challenging equipment. Foot-eye coordination - Improving coordination and balance through various equipment. Hand-eye coordination - Developing coordination and precision in activities requiring fine motor skills.

Cognitive Development

Concentration- Developing the ability to focus and maintain attention in equipment requiring concentration. Spatial awareness- Improving the ability to understand and navigate space through mazes and courses..

Emotional Development

Courage- Facing fears and new challenges. Confidence- Building self-confidence and belief in one's personal abilities. Independence- Developing independence and the ability to make personal decisions. Resilience- Coping with failure and trying again. Perseverance- Encouraging perseverance and repeated attempts. Achievement- Developing a sense of accomplishment and satisfaction from success in challenging equipment.

Social Development

Respect for boundaries- Learning the importance of respecting personal and social boundaries. Friendship creation- Creating friendships and strengthening social bonds. Respect for boundaries- Learning the importance of respecting personal and social boundaries. Friendship creation- Creating friendships and strengthening social bonds.

Physical Development

Climbing - Strengthening arm and leg muscles, developing fitness and endurance Hanging - Strengthening arm, back, and shoulder muscles. Balancing- Improving balance and posture. Swinging - Strengthening core muscles and enhancing the sense of movement. Spinning - Improving balance and vestibular functions through carousels.