# TSP-4664

## The Columbia

Challenging ropes structure model The Columbia

Recycled HDPE:

Steel:

Rope Cables:

Rotation

Balancing

Climbing

Hanging

Sliding

Crawling

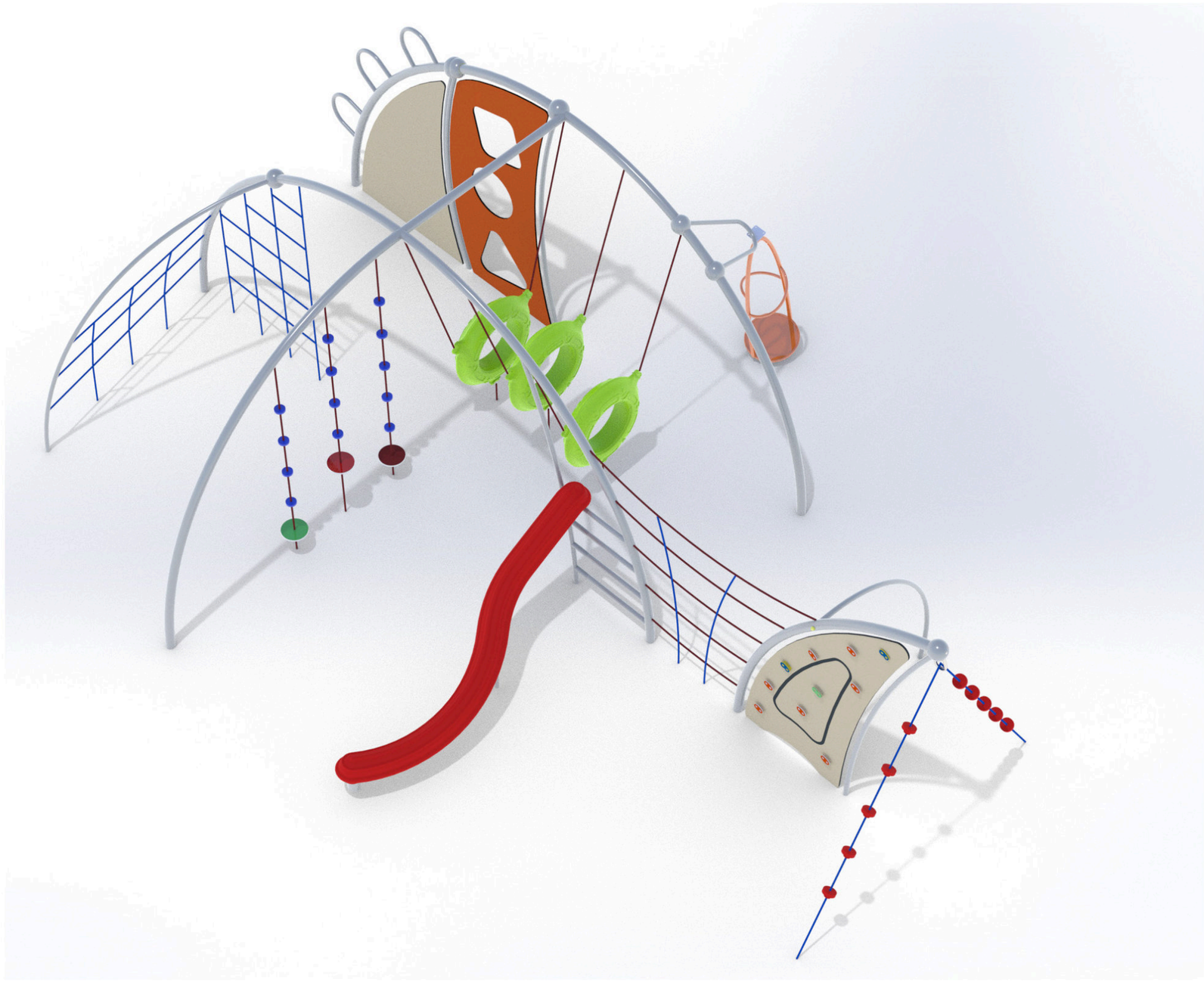

Ages 5-12

Users 40

Dimensions L: 30'-1" W: 21'-1.4" H: 9'-10.7" | cm L: 940 W: 660 H: 309

Safety Zone 42'-6.8"/35'-6.9" | cm 1295.4 / 1082.04

Fall Height 9.6' | 300 cm

Accessible

The Columbia is a challenging play structure features central arches from which a variety of dynamic elements extend. These include different types of ladders, climbing walls, cables, plastic rings, and a sloped spinner. The design is modern and elegant, characterized by sleek, rounded lines. The equipment is purposefully designed to be both challenging and empowering, helping users build physical strength, overcome fear, and develop vital skills for navigating complex and high-risk situations.

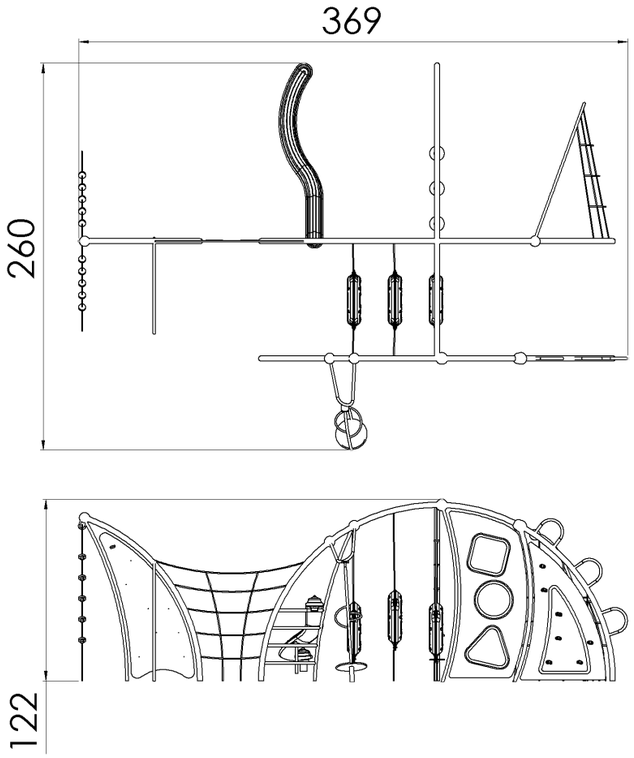


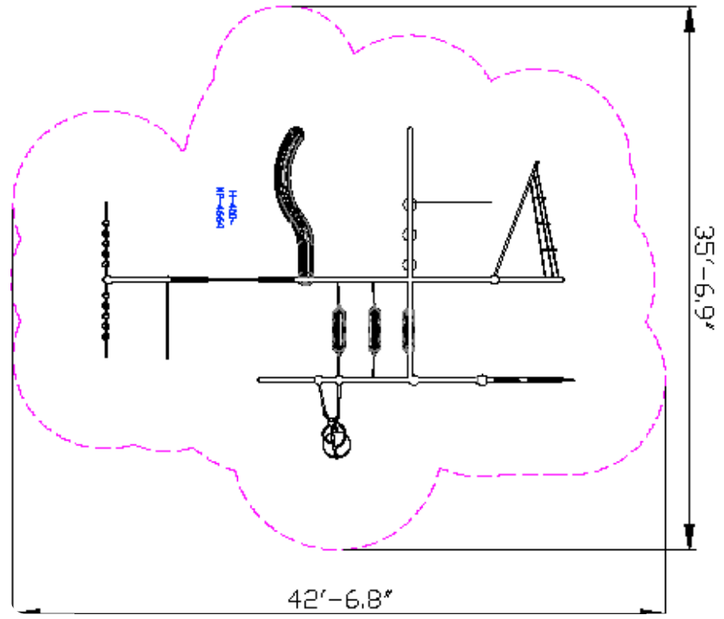


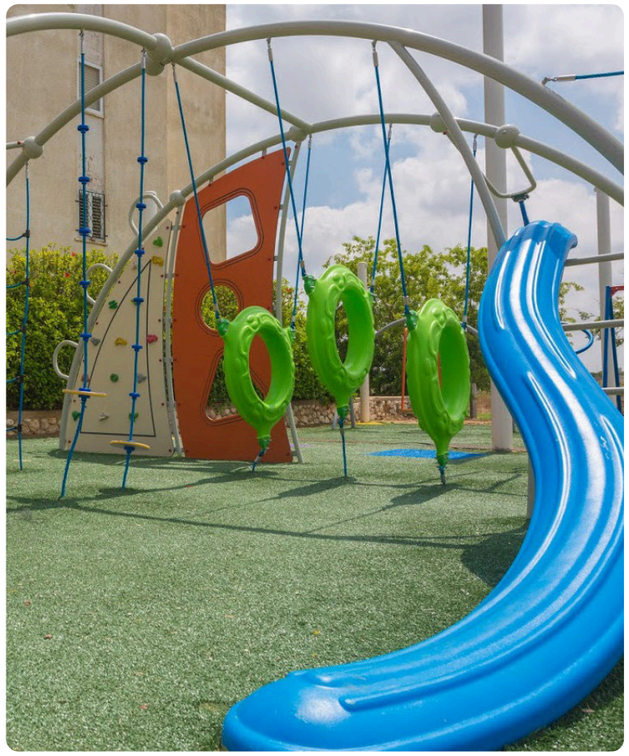



## Stainless Steel 316

Stainless Steel 316 is an alloy of iron, chromium, nickel, and molybdenum, providing exceptional resistance to corrosion, rust, and stains. It meets strict playground equipment standards such as ASTM A240 and EN 10088, offering a smooth touch and shiny appearance. Particularly suitable for use in coastal and humid areas, and industrial and urban environments. Even in these challenging areas, Stainless Steel 316 maintains a clean and shiny appearance over time.Steel 316 maintains a clean and shiny appearance over time.



## Rope Cables

Rope Cables are made of synthetic polypropylene (PP) fibers combined with a galvanized steel core for improved strength and durability. They meet strict standards, such as ASTM A240 and EN 10088, ensuring durability and safety for use in playground equipment. . The cables offer a soft and pleasant touch that does not harm the hands during use and are available in various diameters and colors, allowing for creative and aesthetic design.



## Recycled HDPE

HDPE (High-Density Polyethylene) is a recycled material made from high-density polyethylene, produced from recycled materials that allows for further recycling. It excels in resistance to UV rays and wear and tear, making it particularly suitable for use in outdoor playground equipment. Its touch is smooth and pleasant, and its appearance is maintained over time. The advantages include high resistance to harsh weather conditions and environmental preservation. The material is capable of absorbing high energy, which helps prevent fractures.

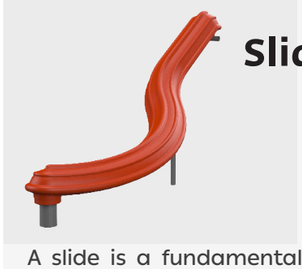

## Slide

A slide is a fundamental and important element in any playground, considered one of the leading and most beloved attractions for players of all ages. The slide provides an enjoyable and exciting sliding experience that develops players' motor skills and coordination. Playing on the slide encourages movement, daring, and self-confidence.



## Designed Climbing Element

The designed climbing element combines physical challenge with a unique and inviting design. Players develop physical skills such as strength, coordination, and balance while playing in a creative and designed environment. The unique design encourages players to play and explore, fostering their imagination and creativity.



## Rope Ladder

The rope ladder provides vertical access to the play structure and encourages players to develop physical skills such as strength, coordination, and balance. Climbing the rope ladder strengthens hand and leg muscles and develops a sense of balance. The ladder encourages players to face challenges and develop flexibility and agility.



## Plastic Transition Element

A play element offering a challenging transition experience that develops players' motor skills. It encourages players to use creativity and think outside the box.



## Climbing Wall

The climbing wall offers a significant physical challenge t



## Springy Mat

The springy mat encourages players to jump and move. Playing on the springy mat develops



## Ladder

The ladder provides vertical access to the play structure and encourages players to develop physical skills such as strength, coordination, and balance. Climbing the ladder promotes courage and independence as players face heights and new challenges. The ladder strengthens hand and arm muscles and encourages proper body use.

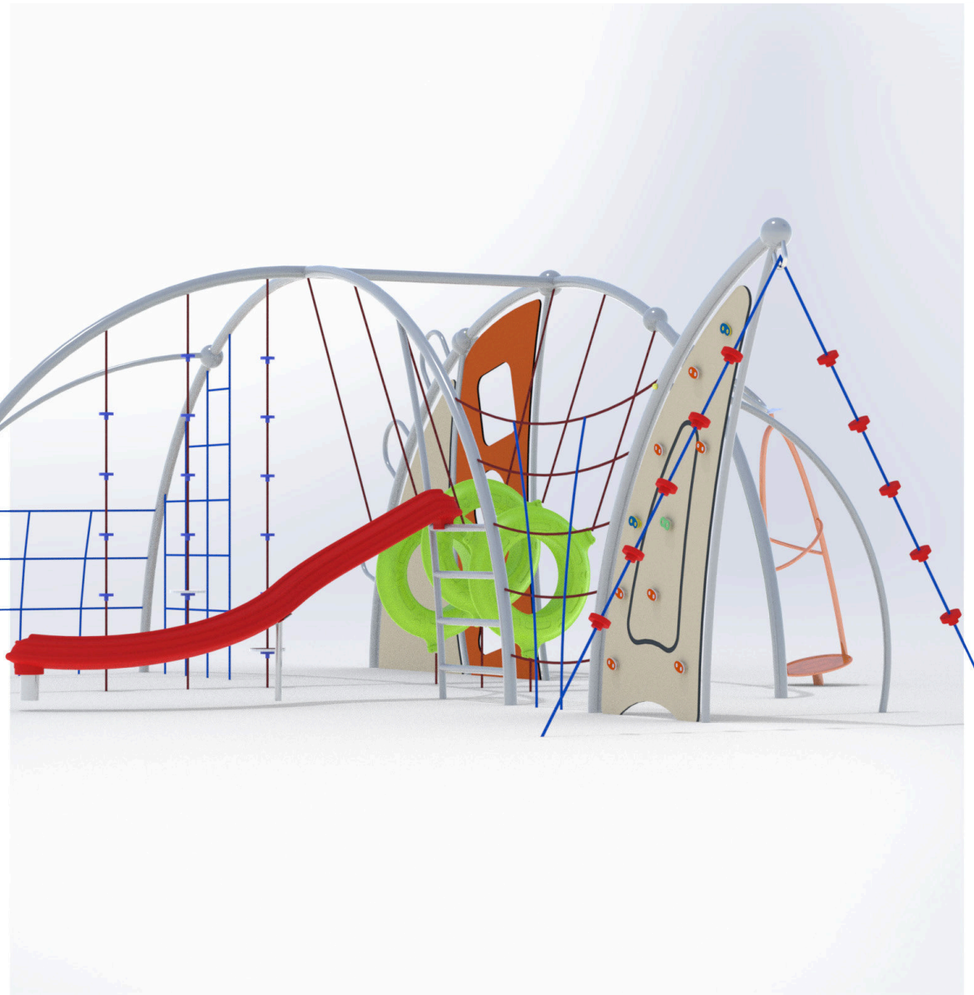

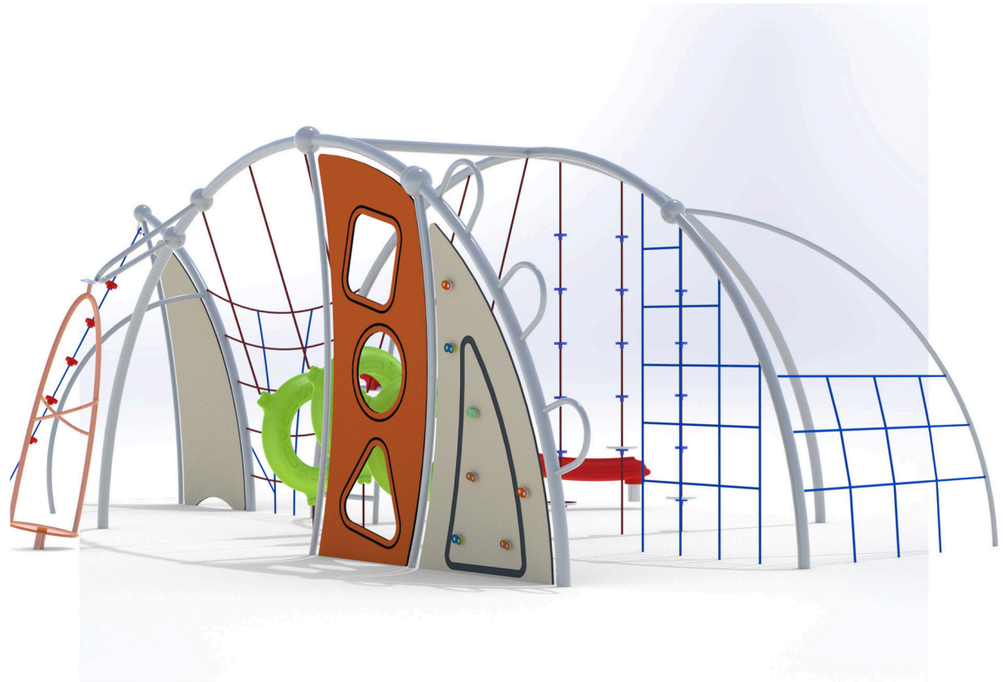

### Motor Development

Core muscle strengthening- Strengthening abdominal and back muscles through challenging equipment. Foot-eye coordination - Improving coordination and balance through various equipment. Hand-eye coordination - Developing coordination and precision in activities requiring fine motor skills.

### Cognitive Development

Concentration- Developing the ability to focus and maintain attention in equipment requiring concentration. Spatial awareness- Improving the ability to understand and navigate space through mazes and courses..

### Emotional Development

Courage- Facing fears and new challenges. Confidence- Building self-confidence and belief in one's personal abilities. Independence- Developing independence and the ability to make personal decisions. Resilience- Coping with failure and trying again. Perseverance- Encouraging perseverance and repeated attempts. Achievement- Developing a sense of accomplishment and satisfaction from success in challenging equipment.

### Social Development

Empathy- Developing empathy and the ability to understand and empathize with others' feelings. Respect for boundaries- Learning the importance of respecting personal and social boundaries. Friendship creation- Creating friendships and strengthening social bonds. Empathy- Developing empathy and the ability to understand and empathize with others' feelings. Respect for boundaries- Learning the importance of respecting personal and social boundaries. Friendship creation- Creating friendships and strengthening social bonds.

### Physical Development

Climbing - Strengthening arm and leg muscles, developing fitness and endurance Hanging - Strengthening arm, back, and shoulder muscles. Balancing- Improving balance and posture. Spinning - Improving balance and vestibular functions through carousels. Sliding - Strengthening leg and arm muscles and improving coordination.