TSP-5015B

Extreme Pyriamid B

Challenging rope pyramid strucutre with HDPE climbing walls model Extreme Pyriamid B

Recycled HDPE:

Steel:

Rope Cables:

Balancing

Hanging

Climbing

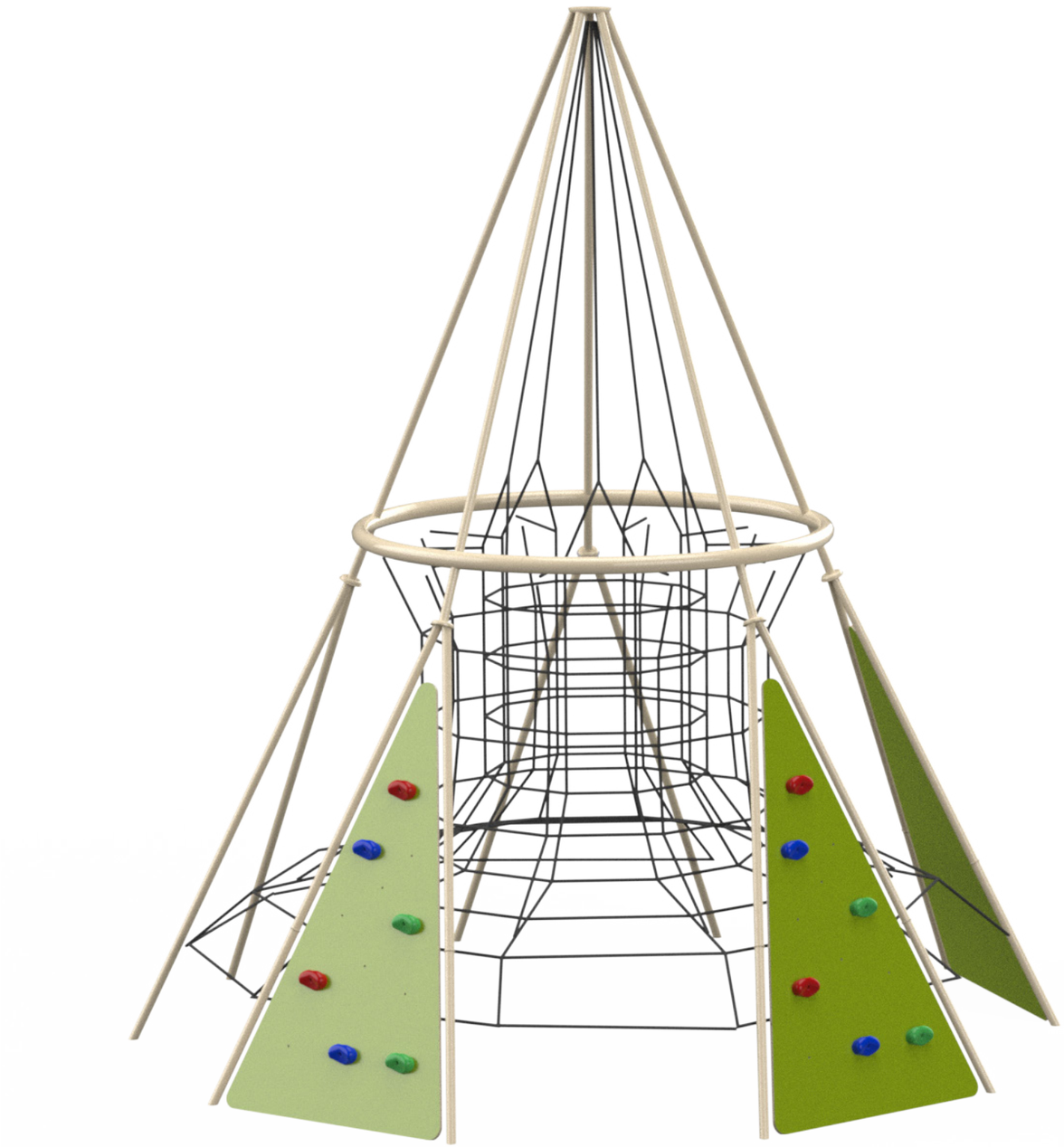

Ages 5-12

Users 33

Dimensions L: 15'-11.6" W: 16'-9.2" H: 16'-8.4" | cm L: 499 W: 524 H: 522

Safety Zone 48'-11.2"/34'-11.9" | cm 1491 / 1064

Fall Height 8.96' | 280 cm

Accessible

The Extreme Pyriamid B is a challenging pyramid-shaped structure meant for climbing and sliding, standing at 5 meters tall. The equipment includes three HDPE climbing walls with hand and foot holds. A 7-meter tube slide extends from the peak of the structure, while numerous climbing and gripping cables are attached to its center, creating challenging climbing routes. It is suitable for imaginative play, physical development, and social intelligence enhancement. The structure encourages curiosity and exploration, independence, spatial awareness, stage planning, and proper organization.

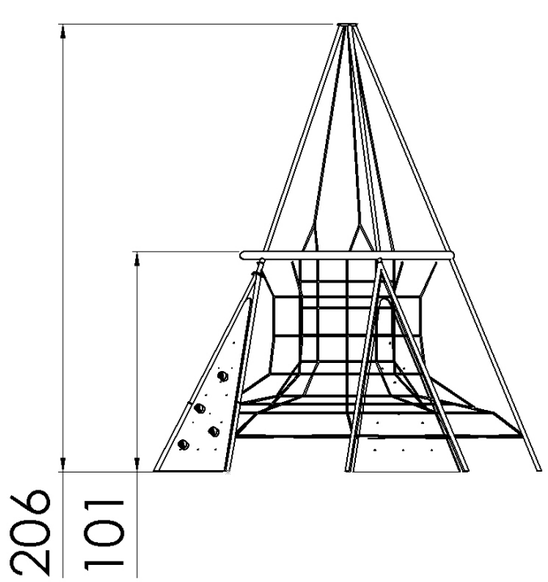

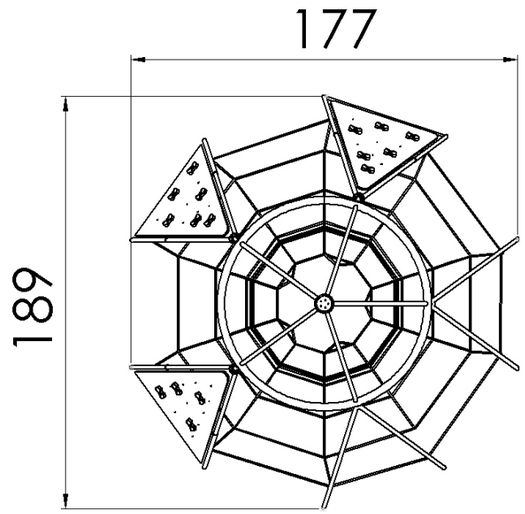





Rope Cables

Rope Cables are made of synthetic polypropylene (PP) fibers combined with a galvanized steel core for improved strength and durability. They meet strict standards, such as ASTM A240 and EN 10088, ensuring durability and safety for use in playground equipment. . The cables offer a soft and pleasant touch that does not harm the hands during use and are available in various diameters and colors, allowing for creative and aesthetic design.



Steel

Steel structure that is strong and durable, oven-painted galvanized and coated with lead-free polyester powder for corrosion and rust resistance. The steel meets strict EN 1176 standards, ensuring high quality and safety. The steel is anti-vandalistic, requires minimal maintenance, and is fully recyclable. The high-quality paint ensures weather resistance and maintains a new appearance over time.



Recycled HDPE

HDPE (High-Density Polyethylene) is a recycled material made from high-density polyethylene, produced from recycled materials that allows for further recycling. It excels in resistance to UV rays and wear and tear, making it particularly suitable for use in outdoor playground equipment. Its touch is smooth and pleasant, and its appearance is maintained over time. The advantages include high resistance to harsh weather conditions and environmental preservation. The material is capable of absorbing high energy, which helps prevent fractures.



Climbing Wall

The climbing wall offers a physical challenge that develops the muscle strength, coordination and weight of the players. Climbing the wall improves their problem solving. This is a place where players overcome fears and develop courage and self-confidence.

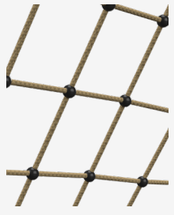

Rope Climbi

The rope climbing net offers a complex challenge that develops players' muscle strength, coordination, and balance. Climbing the net requires planning and forward thinking, encouraging players to overcome obstacles and develop problem-solving skills. The net allows players to experie



Hand and Foot Holds

Hand and foot holds provide support during play and use of the structure. Players develop their strength and coordination while maintaining stability and security.

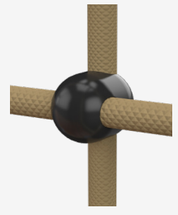

Connectors

The connectors in our play structures are designed to securely and safely join parts of the structure. They are made of durable and high-quality materials, ensuring long-term durability without wear.



Motor Development

Core muscle strengthening- Strengthening abdominal and back muscles through challenging equipment. Foot-eye coordination - Improving coordination and balance through various equipment. Hand-eye coordination - Developing coordination and precision in activities requiring fine motor skills.



Cognitive Development

Spatial awareness- Improving the ability to understand and navigate space through mazes and courses.. Curiosity - Encouraging exploration and discovery through equipment providing new and unfamiliar experiences. Creativity- Developing creative thinking and imagination in open and interactive play.



Emotional Development

Imagination- Encouraging imagination and creating play worlds. Courage- Facing fears and new challenges. Confidence- Building self-confidence and belief in one's personal abilities. Independence- Developing independence and the ability to make personal decisions. Resilience- Coping with failure and trying again.



Social Development

Communication- Developing effective and clear communication skills with playmates Respect for boundaries- Learning the importance of respecting personal and social boundaries. Friendship creation- Creating friendships and strengthening social bonds. Communication- Developing effective and clear communication skills with playmates Respect for boundaries- Learning the importance of respecting personal and social boundaries. Friendship creation- Creating friendships and strengthening social bonds.



Physical Development

Climbing - Strengthening arm and leg muscles, developing fitness and endurance Crawling - Strengthening abdominal and back muscles, improving coordination and flexibility. Balancing- Improving balance and posture. Sliding - Strengthening leg and arm muscles and improving coordination.