TSP-5106

Climbing Cubes

The Climbing Cubes is a challenging climbing strucutre comprised of several connected cubes that serve as climbing walls equipped with hand and foot holds. The structure allows for climbing at various angles and offers a diverse climbing experience. It is designed so that users can climb both upwards and sideways and is suitable for children and teens, helping develop their physical strength, coordination, and balance.

Recycled HDPE:

Steel:

Balancing

Climbing



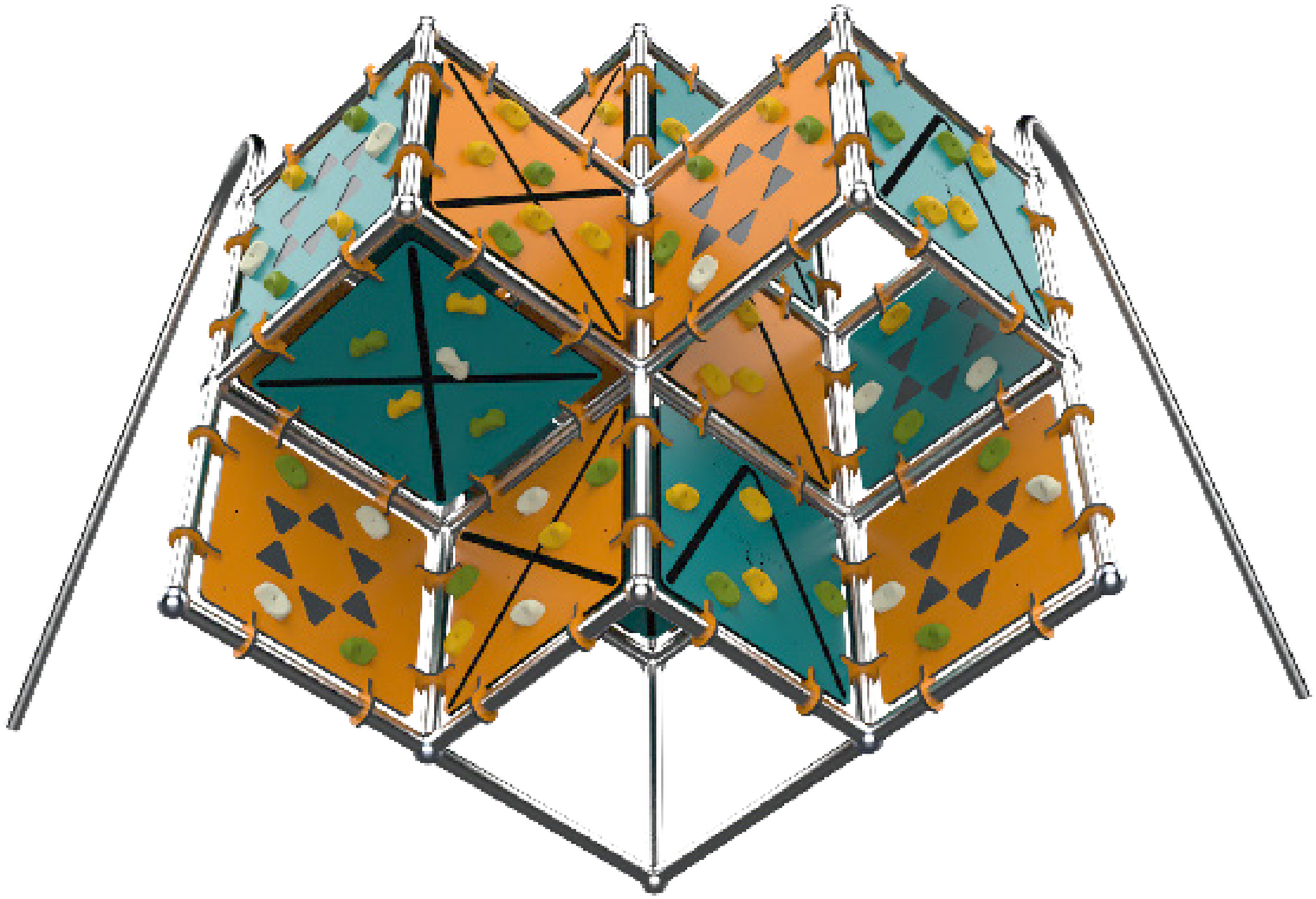

Ages 5-12

Users 30

Dimensions L: 15'-11.6" W: 17'-10.7" H: 9'-3.4" | cm L: 499 W: 559 H: 290

Safety Zone 32'-4"/34'-2.9" | cm 985.52 / 1041.4

Fall Height 9.6' | 300 cm

Accessible



Hand and Foot Holds

Hand and foot holds provide support during play and use of the structure. Players develop their strength and coordination while maintaining stability and security.



Connectors

The connectors in our play structures are designed to securely and safely join parts of the structure. They are made of durable and high-quality materials, ensuring long-term durability without wear.



Climbing Wall

The climbing wall offers a physical challenge that develops the muscle strength, coordination and weight of the players. Climbing the wall improves their problem solving. This is a place where players overcome fears and develop courage and self-confidence.



Engravings

Engravings add designs and illustrations to parts of the structure, enriching the play experience with an interesting visual element.



Recycled HDPE

HDPE (High-Density Polyethylene) is a recycled material made from high-density polyethylene, produced from recycled materials that allows for further recycling. It excels in resistance to UV rays and wear and tear, making it particularly suitable for use in outdoor playground equipment. Its touch is smooth and pleasant, and its appearance is maintained over time. The advantages include high resistance to harsh weather conditions and environmental preservation. The material is capable of absorbing high energy, which helps prevent fractures.



Stainless Steel 316

Stainless Steel 316 is an alloy of iron, chromium, nickel, and molybdenum, providing exceptional resistance to corrosion, rust, and stains. It meets strict playground equipment standards such as ASTM A240 and EN 10088, offering a smooth touch and shiny appearance. Particularly suitable for use in coastal and humid areas, and industrial and urban environments. Even in these challenging areas, Stainless Steel 316 maintains a clean and shiny appearance over time.Steel 316 maintains a clean and shiny appearance over time.

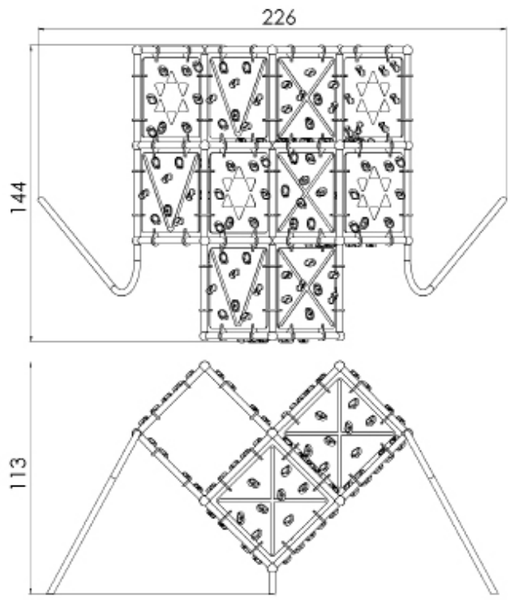

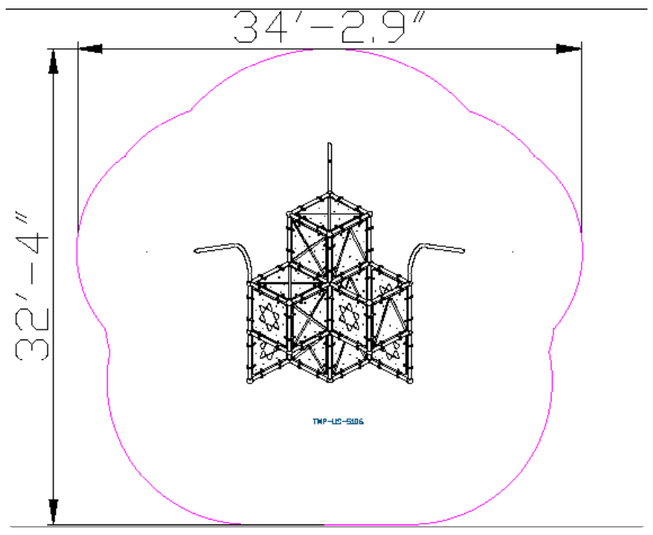

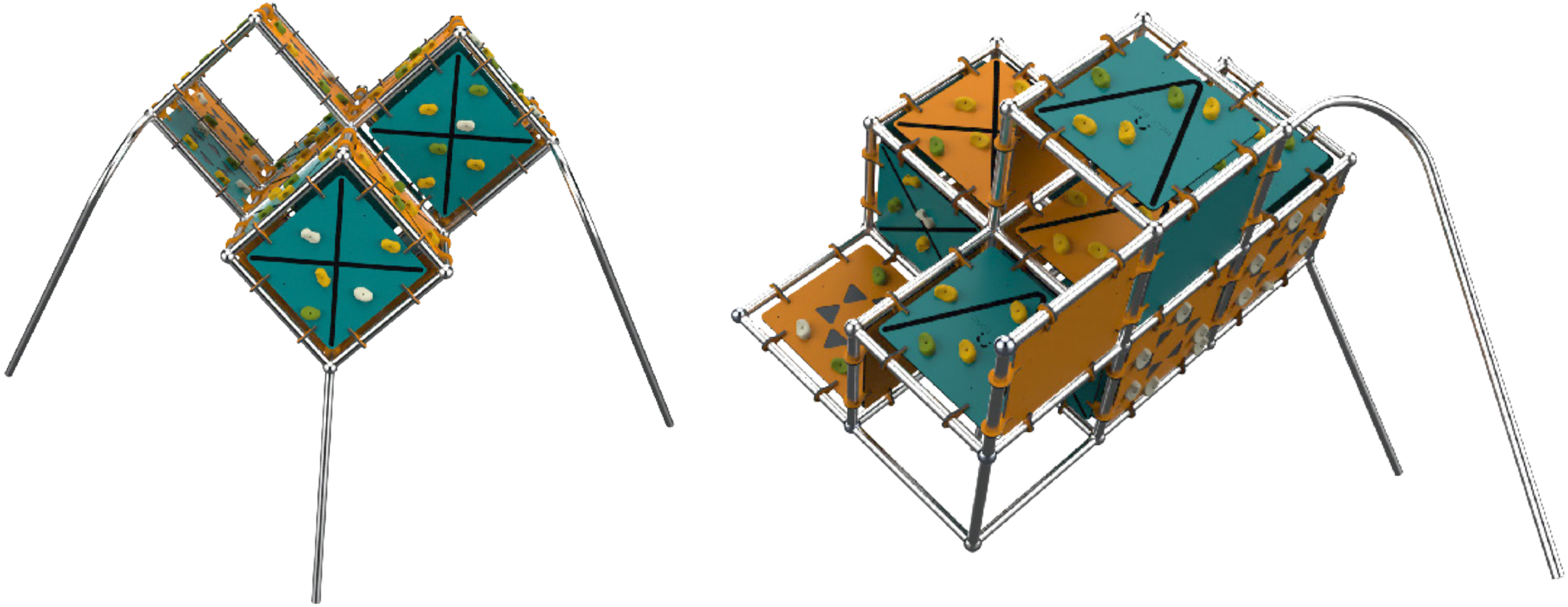

Motor Development

Core muscle strengthening- Strengthening abdominal and back muscles through challenging equipment. Foot-eye coordination - Improving coordination and balance through various equipment. Hand-eye coordination - Developing coordination and precision in activities requiring fine motor skills.

Cognitive Development

Concentration- Developing the ability to focus and maintain attention in equipment requiring concentration. Creativity- Developing creative thinking and imagination in open and interactive play.

Emotional Development

Courage- Facing fears and new challenges. Confidence- Building self-confidence and belief in one's personal abilities. Independence- Developing independence and the ability to make personal decisions. Patience- Practicing patience and waiting for one's turn. Initiative- Encouraging initiative and taking an active role in play. Resilience- Coping with failure and trying again. Perseverance- Encouraging perseverance and repeated attempts.

Social Development

Respect for boundaries- Learning the importance of respecting personal and social boundaries. Friendship creation- Creating friendships and strengthening social bonds. Respect for boundaries- Learning the importance of respecting personal and social boundaries. Friendship creation- Creating friendships and strengthening social bonds.

Physical Development

Climbing - Strengthening arm and leg muscles, developing fitness and endurance Balancing- Improving balance and posture.