TSP-5106A

Climbing Cubes A

Climbing Cubes A is a challenging structure consisting of several connected cubes functioning as climbing walls equipped with holds. The structure allows climbing at different angles, providing a diverse challenge experience. It is designed for users to climb both upwards and sideways, integrating hand and foot grips. Suitable for children and youth, it develops physical strength, coordination, and balance.

Recycled HDPE:

Steel:

Balancing

Climbing

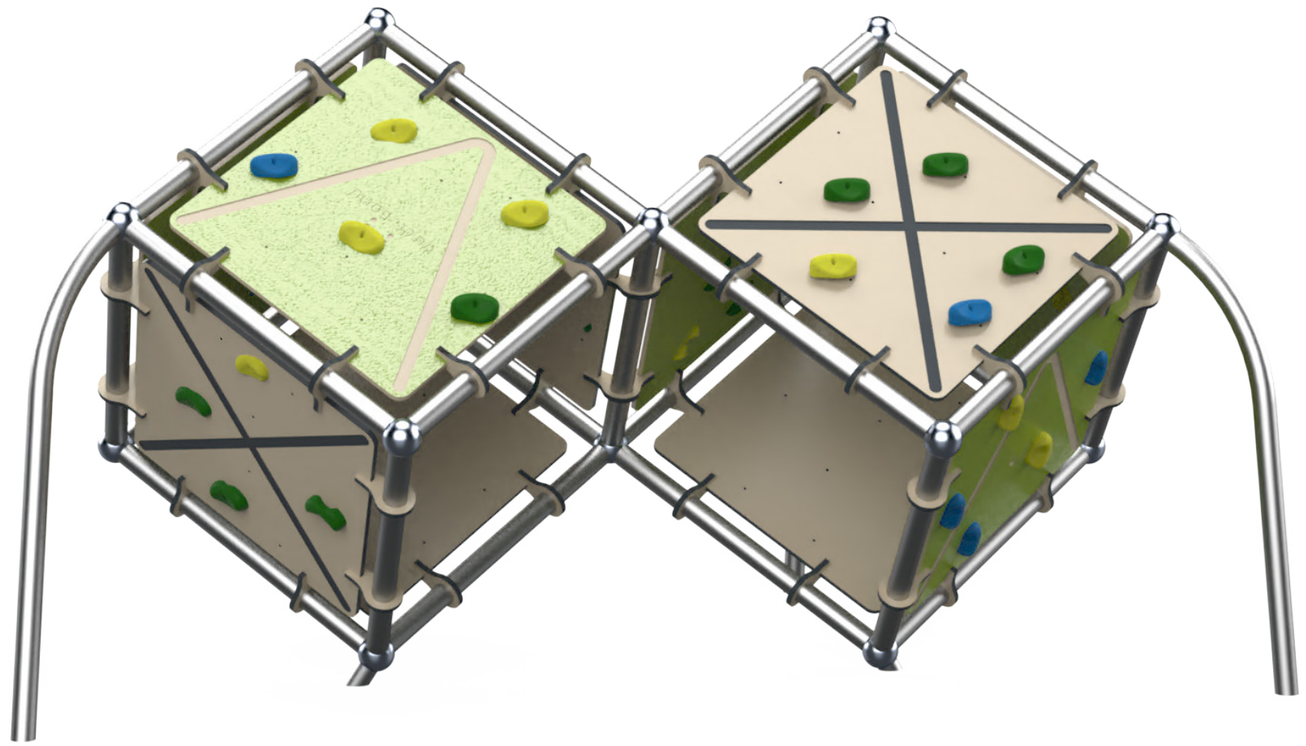

Ages 5-12

Users 15

Dimensions L: 7'-4.3" W: 13'-2.6" H: 6'-0.2" | cm L: 230 W: 413 H: 188

Safety Zone 29'-2.6"/27'-0.3" | cm 889 / 822.96

Fall Height 9.6' | 300 cm

Accessible



Hand and Foot Holds

Hand and foot holds provide support during play and use of the structure. Players develop their strength and coordination while maintaining stability and security.



Connectors

The connectors in our play structures are designed to securely and safely join parts of the structure. They are made of durable and high-quality materials, ensuring long-term durability without wear.



Climbing Wall

The climbing wall offers a physical challenge that develops the muscle strength, coordination and weight of the players. Climbing the wall improves their problem solving. This is a place where players overcome fears and develop courage and self-confidence.



Engravings

Engravings add designs and illustrations to parts of the structure, enriching the play experience with an interesting visual element.



Steel

Steel structure that is strong and durable, oven-painted galvanized and coated with lead-free polyester powder for corrosion and rust resistance. The steel meets strict EN 1176 standards, ensuring high quality and safety. The steel is anti-vandalistic, requires minimal maintenance, and is fully recyclable. The high-quality paint ensures weather resistance and maintains a new appearance over time.



Recycled HDPE

HDPE (High-Density Polyethylene) is a recycled material made from high-density polyethylene, produced from recycled materials that allows for further recycling. It excels in resistance to UV rays and wear and tear, making it particularly suitable for use in outdoor playground equipment. Its touch is smooth and pleasant, and its appearance is maintained over time. The advantages include high resistance to harsh weather conditions and environmental preservation. The material is capable of absorbing high energy, which helps prevent fractures.



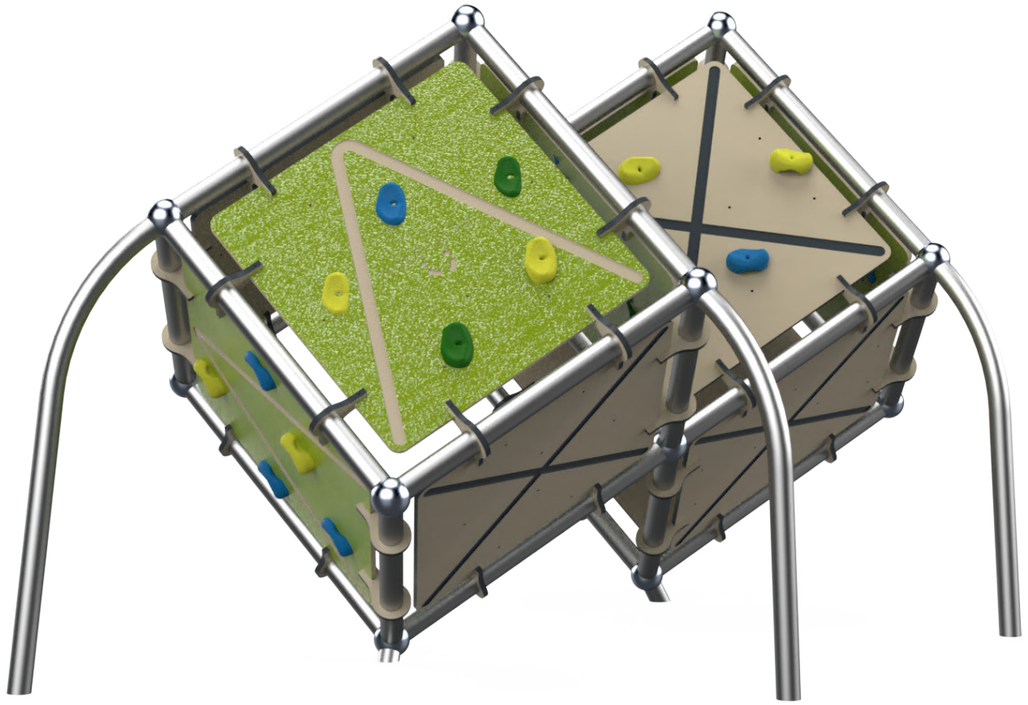

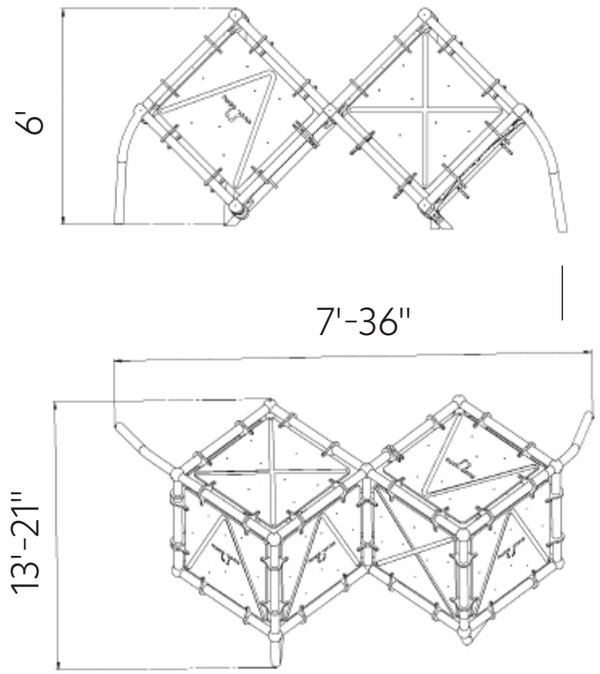

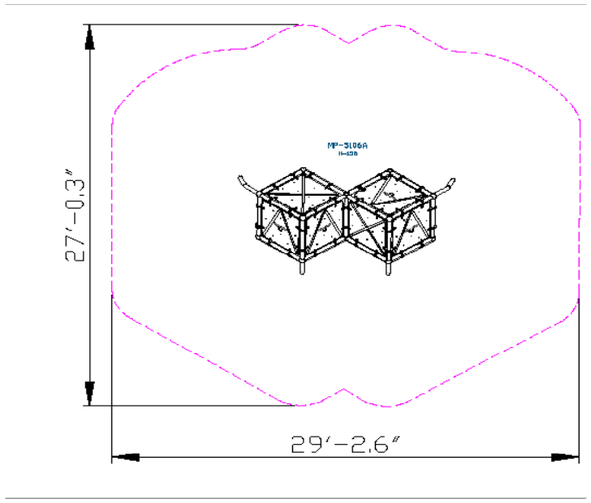

Motor Development

Core muscle strengthening- Strengthening abdominal and back muscles through challenging equipment. Foot-eye coordination - Improving coordination and balance through various equipment. Hand-eye coordination - Developing coordination and precision in activities requiring fine motor skills.

Cognitive Development

Concentration- Developing the ability to focus and maintain attention in equipment requiring concentration. Spatial awareness- Improving the ability to understand and navigate space through mazes and courses.. Creativity- Developing creative thinking and imagination in open and interactive play.

Emotional Development

Courage- Facing fears and new challenges. Confidence- Building self-confidence and belief in one's personal abilities. Independence- Developing independence and the ability to make personal decisions. Patience- Practicing patience and waiting for one's turn. Resilience- Coping with failure and trying again. Perseverance- Encouraging perseverance and repeated attempts.

Physical Development

Climbing - Strengthening arm and leg muscles, developing fitness and endurance Balancing- Improving balance and posture.