TSP-5110

George Washington Bridge B

The George Washington Bridge B is designed for climbing and traversing games while maintaining balance. It encourages users to overcome climbing challenges by relying on arm and leg strength, developing coordination, endurance, and balance. George Washington Bridge B can be incorporated as part of a full course or as an independent element.

Steel:

Rope Cables:



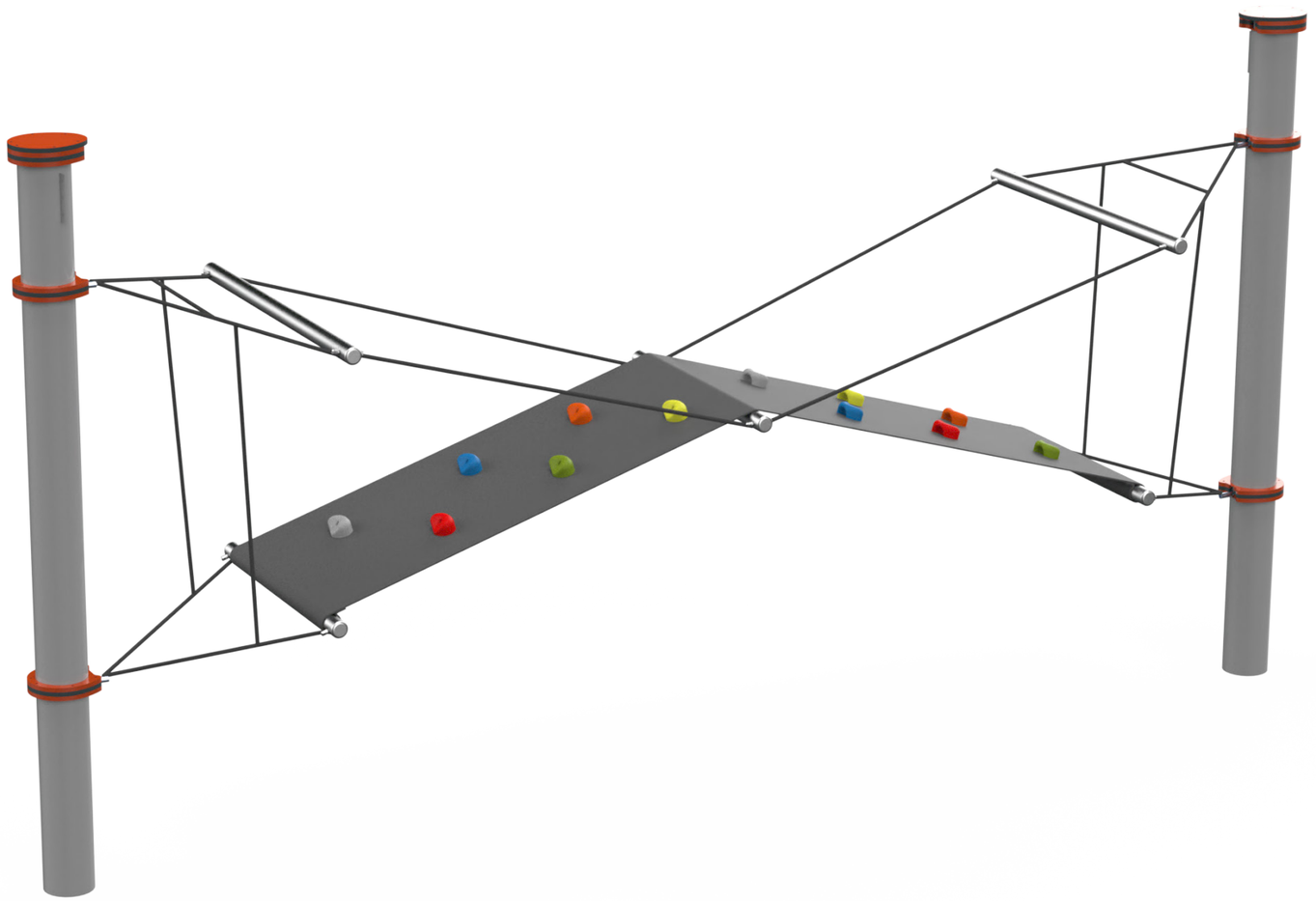

Ages 5-12 | Users 4 | Dimensions L: 5'-4.9" W: 20'-1.2 H: 10'-8.3" | cm L: 169 W: 628 H: 334 | Safety Zone 17'-6.4"/32'-9.3" | cm 533.4 / 998.22 | Fall Height 5.44" | 170 cm | Accessible

Motor Development

Foot-eye coordination - Improving coordination and balance through various equipment. Hand-eye coordination - Developing coordination and precision in activities requiring fine motor skills.

Physical Development

Climbing - Strengthening arm and leg muscles, developing fitness and endurance Balancing- Improving balance and posture.

Cognitive Development

Spatial awareness- Improving the ability to understand and navigate space through mazes and courses..

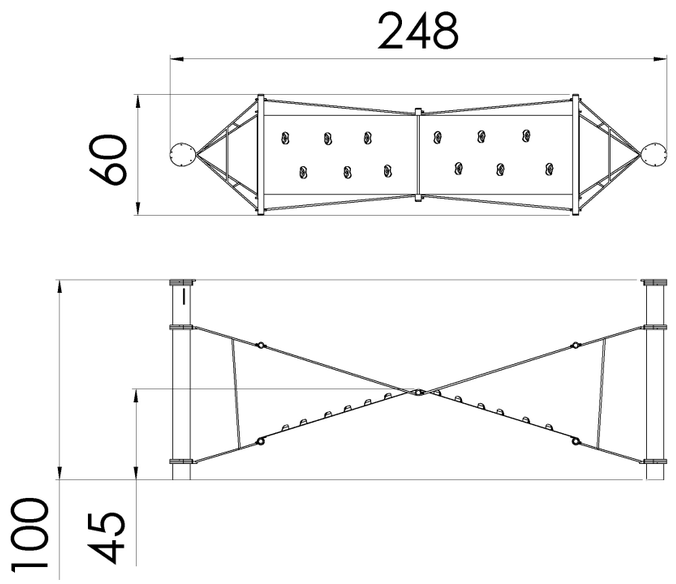



Rope Cables

Rope Cables are made of synthetic polypropylene (PP) fibers combined with a galvanized steel core for improved strength and durability. They meet strict standards, such as ASTM A240 and EN 10088, ensuring durability and safety for use in playground equipment. . The cables offer a soft and pleasant touch that does not harm the hands during use and are available in various diameters and colors, allowing for creative and aesthetic design.



Steel

Steel structure that is strong and durable, oven-painted galvanized and coated with lead-free polyester powder for corrosion and rust resistance. The steel meets strict EN 1176 standards, ensuring high quality and safety. The steel is anti-vandalistic, requires minimal maintenance, and is fully recyclable. The high-quality paint ensures weather resistance and maintains a new appearance over time.



Hand and Foot Holds

Hand and foot holds provide support during play and use of the structure. Players develop their strength and coordination while maintaining stability and security.

