TSP-10709

Double Bubble

Extreme play system model Double Bubble

Recycled HDPE:

Steel:

Rope Cables:

Balancing

Crav

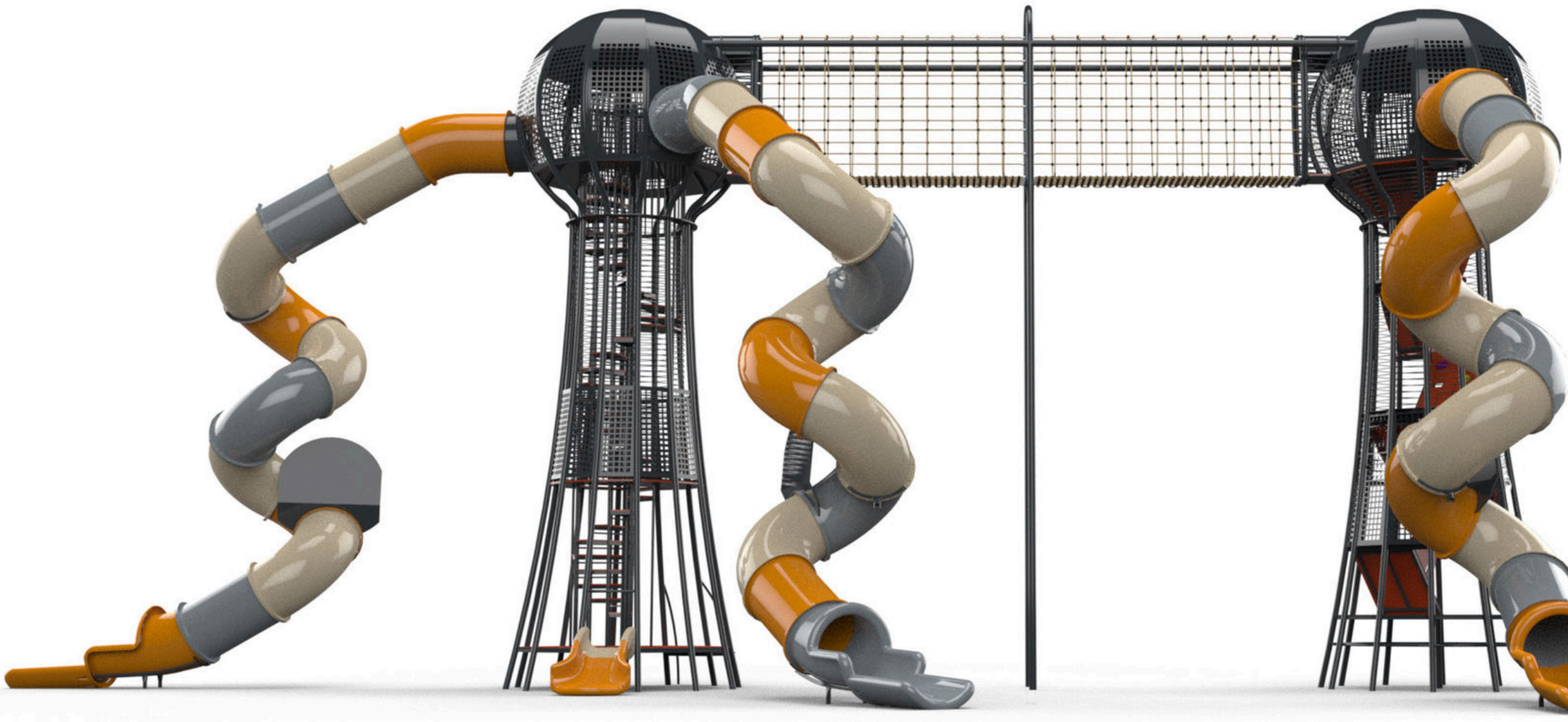

Ages 5-12

Users 170

L: 45'-1.4" W: 47'-10.8" H: 28'-3.8" | cm L: 1410 W: 1497 H: 885

Safety Zone 65'-0.1"/58'-7.1" | cm 1981.2 / 1785.62

Fall Height 8' | 250 cm

Accessible

The Double Bubble structure is a version of the prestigious international REDDOT Design Award winner for 2019, chosen from thousands of competitors worldwide. This structure is impressive in its unique design and the combination of diverse elements that challenge users and provide a rich and enjoyable play experience. The Double Bubble includes rope bridges, high slides, and challenging spiral stairs.

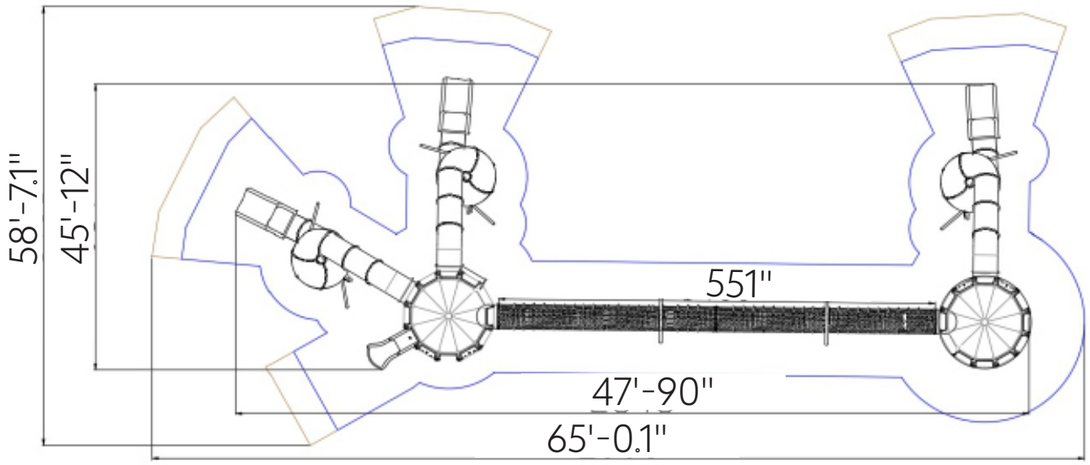





Steel

Steel structure that is strong and durable, oven-painted galvanized and coated with lead-free polyester powder for corrosion and rust resistance. The steel meets strict EN 1176 standards, ensuring high quality and safety. The steel is anti-vandalistic, requires minimal maintenance, and is fully recyclable. The high-quality paint ensures weather resistance and maintains a new appearance over time.



Rope Cables

Rope Cables are made of synthetic polypropylene (PP) fibers combined with a galvanized steel core for improved strength and durability. They meet strict standards, such as ASTM A240 and EN 10088, ensuring durability and safety for use in playground equipment. . The cables offer a soft and pleasant touch that does not harm the hands during use and are available in various diameters and colors, allowing for creative and aesthetic design.



Recycled HDPE

HDPE (High-Density Polyethylene) is a recycled material made from high-density polyethylene, produced from recycled materials that allows for further recycling. It excels in resistance to UV rays and wear and tear, making it particularly suitable for use in outdoor playground equipment. Its touch is smooth and pleasant, and its appearance is maintained over time. The advantages include high resistance to harsh weather conditions and environmental preservation. The material is capable of absorbing high energy, which helps prevent fractures.

REDDOT Design Award

Winner of the prestigious RED-DOT International Design Award for 2019, granted for excellence in design for innovative, unique, and advanced products in their field.



Climbing Element

The climbing element offers a physical challenge that develops muscle strength, coordination, and balance. Climbing on the element encourages children to overcome fears and build self-confidence and perseverance. Additionally, the element helps develop problem-solving skills as children look for efficient and safe ways to climb.



Barrel Slide

The barrel slide provides an exciting and challenging sliding experience, combining movement with a sense of adventure. Sliding in this slide develops players' motor skills and coordination as they move through the tube at varying speeds. The sliding action boosts self-confidence and encourages daring as players face the challenge of fast movement. The slide is a fundamental and important element in any playground and is considered one of the leading and most beloved attractions for players of all ages.



Toddler Slide

The toddler slide provides a safe and enjoyable sliding experience for little ones. It develops coordination, movement, balance, and self-confidence for young players.

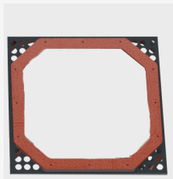

Ventilated Panel

The ventilated panel offers an activity that stimulates the sense of touch and provides a feeling of wind and freshness. Playing with the panel develops players' motor and sensory skills.



Closed Bridge

The closed bridge provides safe and convenient passage between parts of the structure, developing players' motor skills and balance. The bridge offers a sense of security in a protected environment while maintaining the element of adventure and challenge. The height effect adds a dimension of excitement as players face height in a safe and protected environment. Playing on the bridge encourages daring and self-confidence.



Climbing Element

The climbing element offers a physical challenge that develops muscle strength, coordination, and balance. Climbing on the element encourages children to overcome fears and build self-confidence and perseverance. Additionally, the element helps develop problem-solving skills as children look for efficient and safe ways to climb.

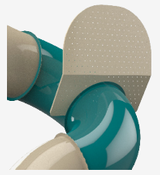

Climbing Guard

The climbing guard provides additional protection in areas where there is a risk of climbing and falling.

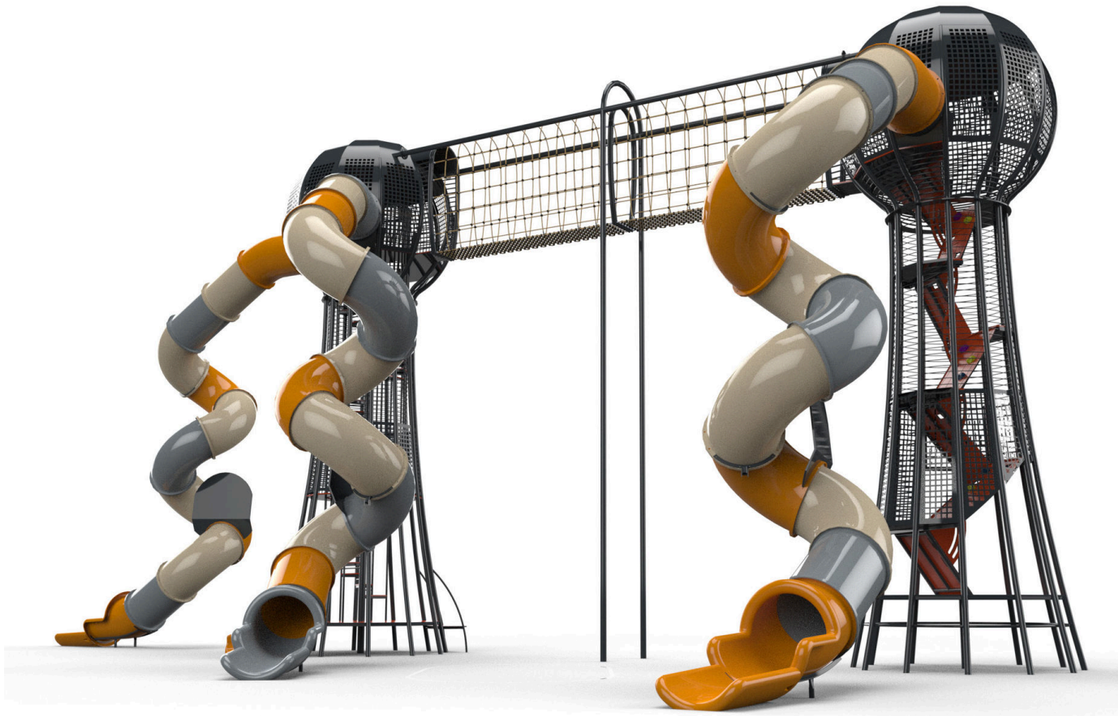

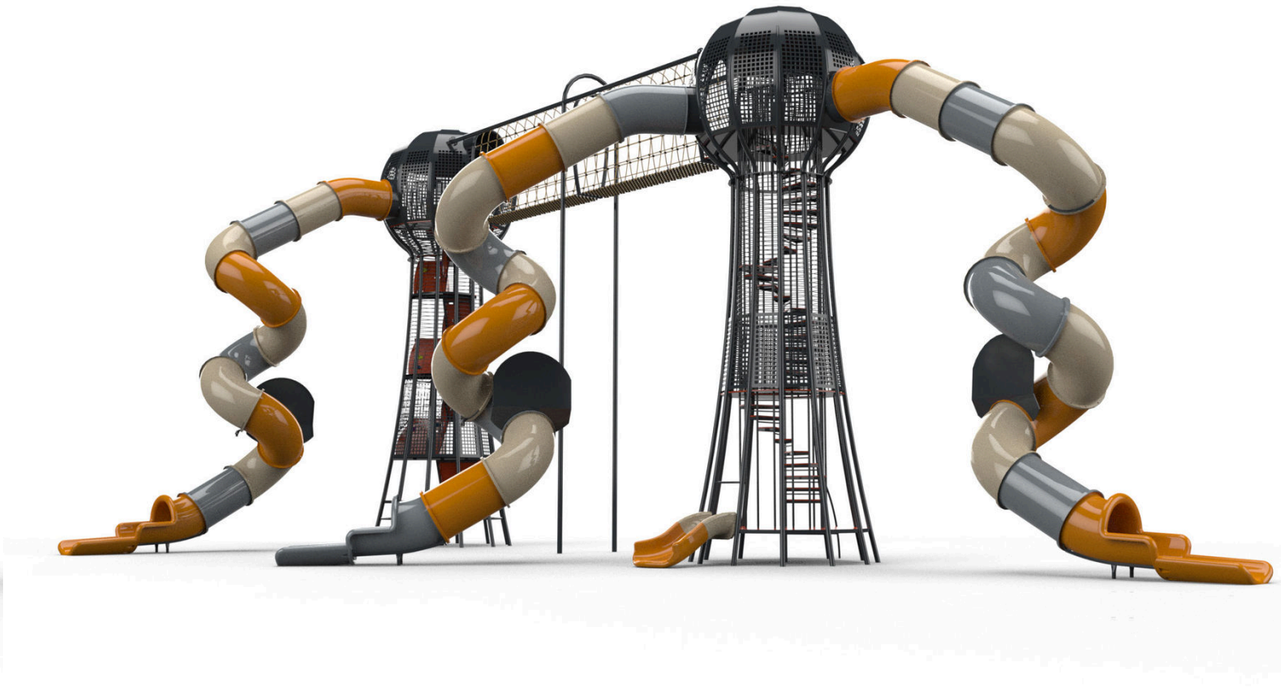

Motor Development

Hand-eye coordination - Developing coordination and precision in activities requiring fine motor skills.

Cognitive Development

Concentration- Developing the ability to focus and maintain attention in equipment requiring concentration. Spatial awareness- Improving the ability to understand and navigate space through mazes and courses..

Emotional Development

Imagination- Encouraging imagination and creating play worlds. Courage- Facing fears and new challenges. Confidence- Building self-confidence and belief in one's personal abilities. Independence- Developing independence and the ability to make personal decisions. Patience- Practicing patience and waiting for one's turn.

Social Development

Respect for boundaries- Learning the importance of respecting personal and social boundaries. Friendship creation- Creating friendships and strengthening social bonds. Respect for boundaries- Learning the importance of respecting personal and social boundaries. Friendship creation- Creating friendships and strengthening social bonds.

Physical Development

Climbing - Strengthening arm and leg muscles, developing fitness and endurance Crawling - Strengthening abdominal and back muscles, improving coordination and flexibility. Sliding - Strengthening leg and arm muscles and improving coordination.