TSP-10911AA

Long Beach 1 AA

Extreme play system model Long Beach 1 AA

Recycled HDPE:

Steel:

Rope Cables:

Balancing Climbing Sliding

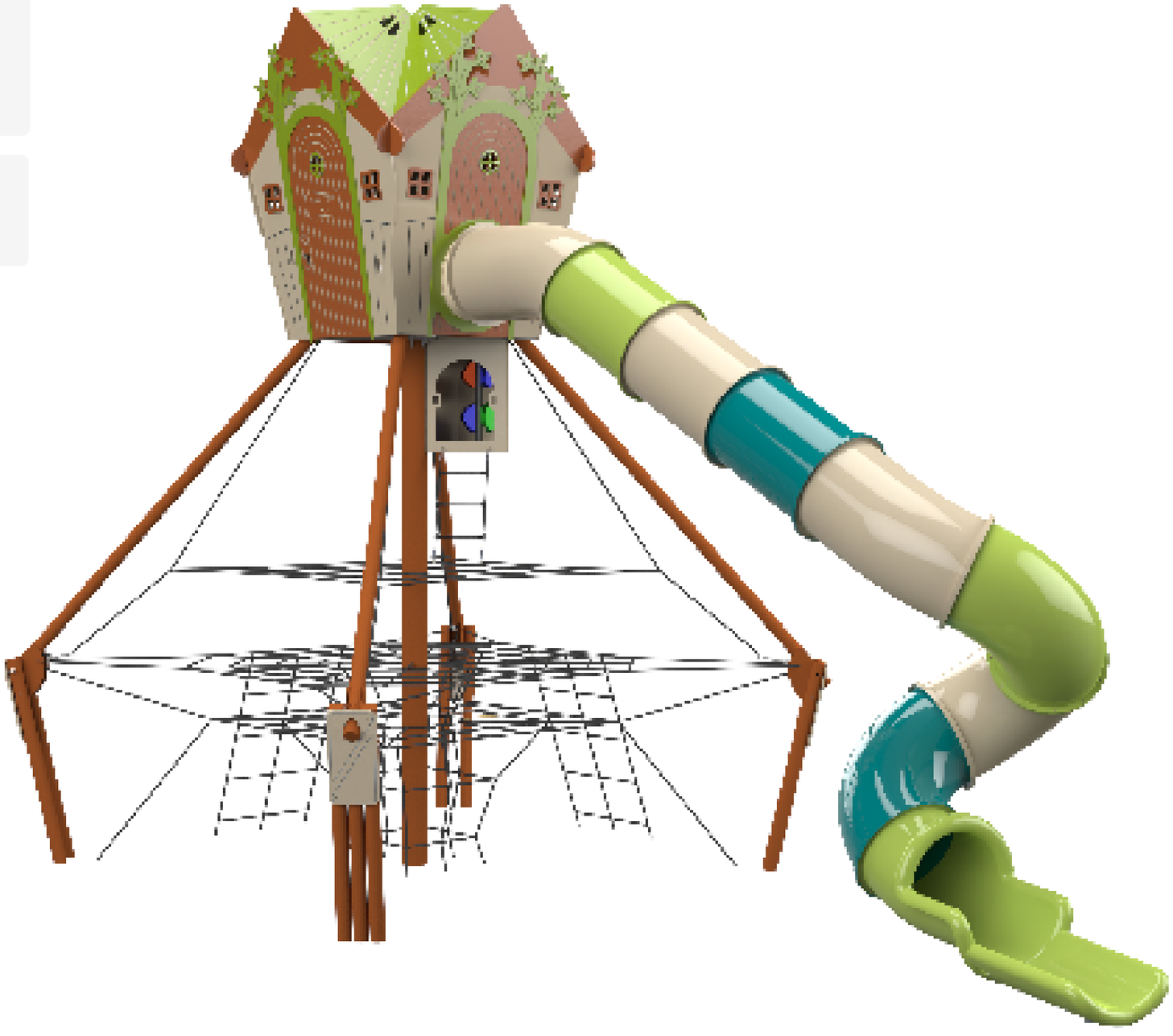

Ages 5-12 | Users 67 | Dimensions L: 17'-9.5" W: 33'-7.2" H: 24'-7.3" | cm L: 556 W: 1050 H: 769 | Safety Zone 45'-7.7"/37'-6.5" | cm 1389.38 / 1143 | Fall Height 9.28' | 290 cm

The Long Beach 1 AA is an extreme play structure, made of steel, cables, and HDPE/ HPL. Climbing to the cabin is done using an intricate rope system. The descent is via a long corked tube slide. The cabin has three rounded windows that provide an open view and allow supervision and accompaniment from outside the structure.

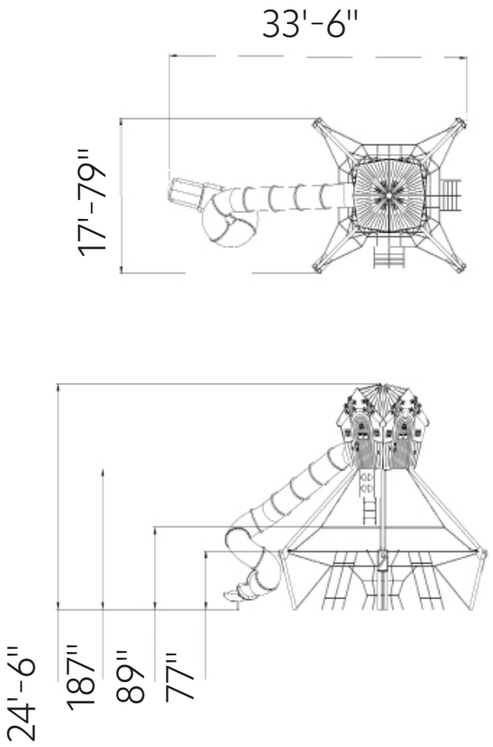

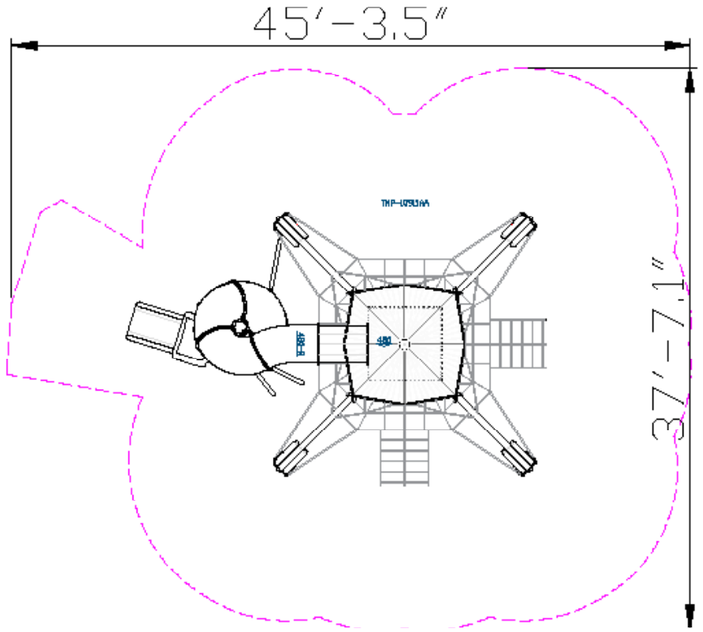





Rope Cables

Rope Cables are made of synthetic polypropylene (PP) fibers combined with a galvanized steel core for improved strength and durability. They meet strict standards, such as ASTM A240 and EN 10088, ensuring durability and safety for use in playground equipment. . The cables offer a soft and pleasant touch that does not harm the hands during use and are available in various diameters and colors, allowing for creative and aesthetic design.



Recycled HDPE

HDPE (High-Density Polyethylene) is a recycled material made from high-density polyethylene, produced from recycled materials that allows for further recycling. It excels in resistance to UV rays and wear and tear, making it particularly suitable for use in outdoor playground equipment. Its touch is smooth and pleasant, and its appearance is maintained over time. The advantages include high resistance to harsh weather conditions and environmental preservation. The material is capable of absorbing high energy, which helps prevent fractures.



Steel

Steel structure that is strong and durable, oven-painted galvanized and coated with lead-free polyester powder for corrosion and rust resistance. The steel meets strict EN 1176 standards, ensuring high quality and safety. The steel is anti-vandalistic, requires minimal maintenance, and is fully recyclable. The high-quality paint ensures weather resistance and maintains a new appearance over time.



Land of Oz Roof

The Land of Oz roof adds a unique design to the play structure, inspired by the world of imagination, giving players the feeling of entering a magical realm. The roof provides shade and protection while enhancing the play experience with captivating storytelling.

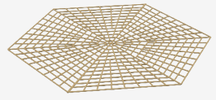

Net Floor

The net floor offers players a fascinating experience that combines stability and challenge. The floor is made of rope netting, providing a sensation of light hovering above the ground. Playing on the net floor develops balance, coordination, and self-confidence in the players.

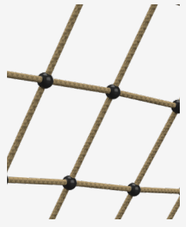

Rope Climbi

The rope climbing net offers a complex challenge that develops players' muscle strength, coordination, and balance. Climbing the net requires planning and forward thinking, encouraging players to overcome obstacles and develop problem-solving skills. The net allows players to experie



Musical Panel

The musical panel stimulates the sense of hearing and encourages players to create and play sounds and melodies. Playing with the panel develops players' creativity, rhythm, and coordination.



Barrel Slide

The barrel slide provides an exciting and challenging sliding experience, combining movement with a sense of adventure. Sliding in this slide develops players' motor skills and coordination as they move through the tube at varying speeds. The sliding action boosts self-confidence and encourages daring as players face the challenge of fast movement. The slide is a fundamental and important element in any playground and is considered one of the leading and most beloved attractions for players of all ages.



Ventilation Window

A ventilation window provides a sense of openness and ventilates the structure, enhancing the play experience and adding an element of enjoyment and freshness. It also allows for maintaining eye contact between the player and companion, strengthening the sense of security.



Fall Guard

The fall guard provides additional protection in areas where there is a risk of climbing and falling.



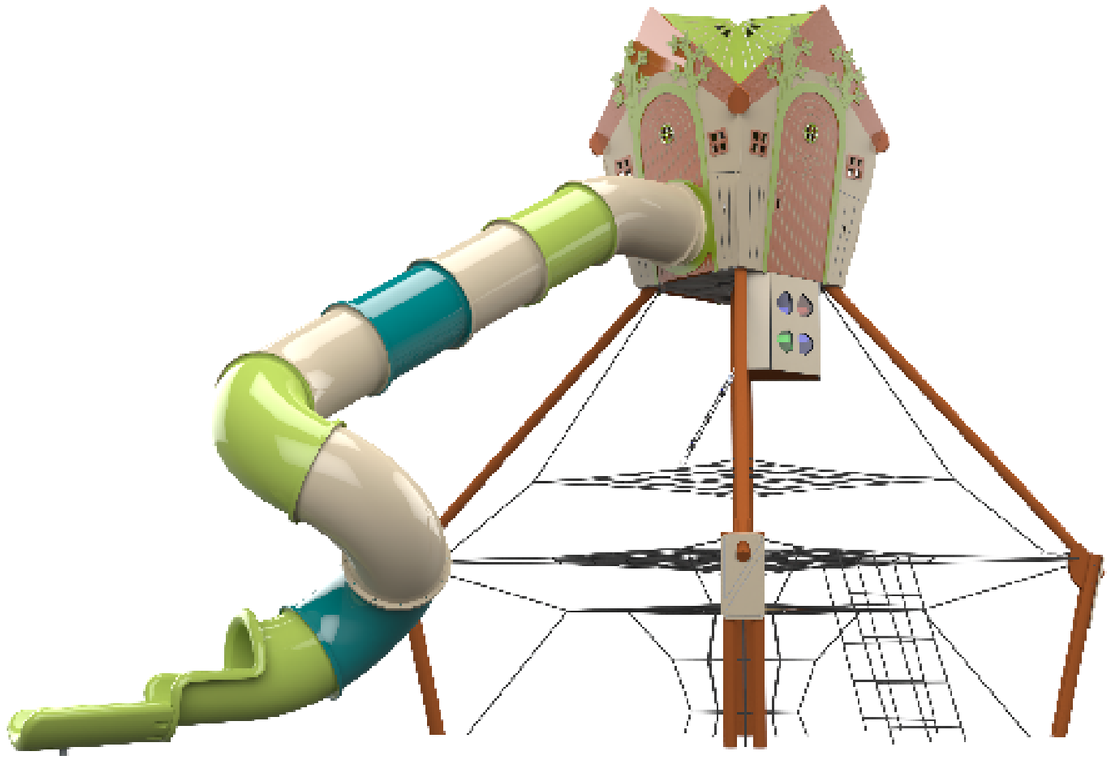

Motor Development

Foot-eye coordination - Improving coordination and balance through various equipment. Hand-eye coordination - Developing coordination and precision in activities requiring fine motor skills.

Cognitive Development

Concentration- Developing the ability to focus and maintain attention in equipment requiring concentration. Curiosity - Encouraging exploration and discovery through equipment providing new and unfamiliar experiences. Creativity- Developing creative thinking and imagination in open and interactive play.

Emotional Development

Courage- Facing fears and new challenges. Confidence- Building self-confidence and belief in one's personal abilities. Independence- Developing independence and the ability to make personal decisions. Resilience- Coping with failure and trying again.

Social Development

Communication- Developing effective and clear communication skills with playmates Friendship creation- Creating friendships and strengthening social bonds. Communication- Developing effective and clear communication skills with playmates Friendship creation- Creating friendships and strengthening social bonds.

Physical Development

Climbing - Strengthening arm and leg muscles, developing fitness and endurance Balancing- Improving balance and posture. Sliding - Strengthening leg and arm muscles and improving coordination.