TSP-10946

Long Beach 4

Extreme play system model Long Beach 4 Towers

Recycled HDPE:

Steel:

Rope Cables:

Balancing

Climbing

Sliding



Ages 5-12

Users 189

Dimensions L: 34'-6.3" W: 52'-8.1" H: 24'-7.7" | cm L: 1079 W: 1646 H: 770

Safety Zone 82'-6.5"/51'-3.1" | cm 2514 / 1562

Fall Height 9.6' | 300 cm

Accessible

The Long Beach 4 is a playground designed and inspired by magical fantasy worlds like forest cottages, and is intended for children seeking diverse and challenging play experiences. The play system includes towers of different heights connected by rope bridges and dynamic climbing routes. Additionally, the play system is equipped with straight tube slides and various climbing elements, including climbing walls with hand and foot holds and cable ladders.

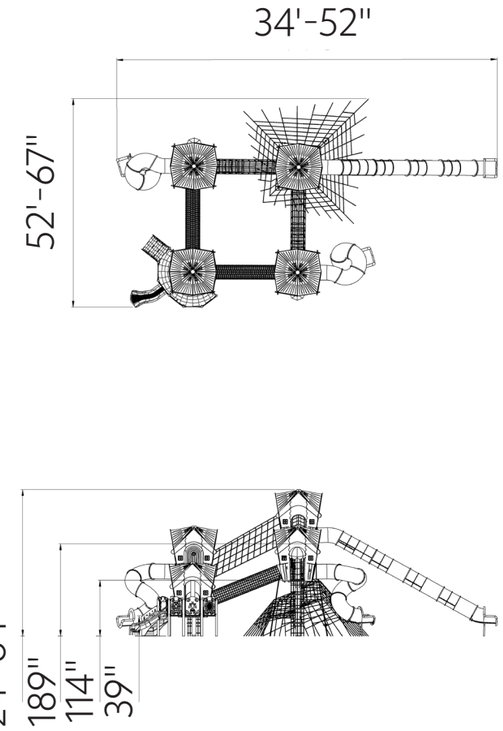

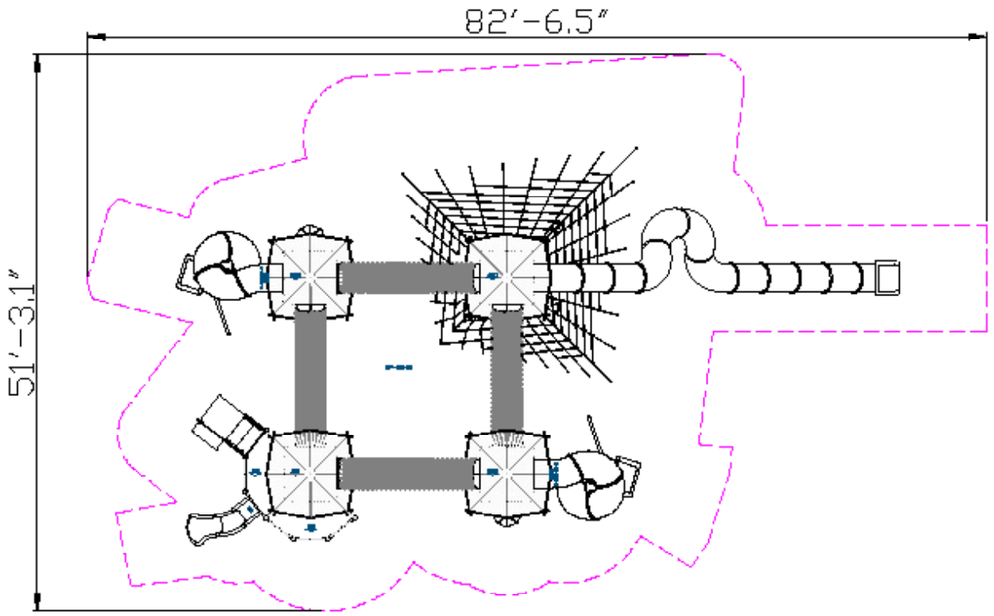





Rope Cables

Rope Cables are made of synthetic polypropylene (PP) fibers combined with a galvanized steel core for improved strength and durability. They meet strict standards, such as ASTM A240 and EN 10088, ensuring durability and safety for use in playground equipment. . The cables offer a soft and pleasant touch that does not harm the hands during use and are available in various diameters and colors, allowing for creative and aesthetic design.



Recycled HDPE

HDPE (High-Density Polyethylene) is a recycled material made from high-density polyethylene, produced from recycled materials that allows for further recycling. It excels in resistance to UV rays and wear and tear, making it particularly suitable for use in outdoor playground equipment. Its touch is smooth and pleasant, and its appearance is maintained over time. The advantages include high resistance to harsh weather conditions and environmental preservation. The material is capable of absorbing high energy, which helps prevent fractures.



Steel

Steel structure that is strong and durable, oven-painted galvanized and coated with lead-free polyester powder for corrosion and rust resistance. The steel meets strict EN 1176 standards, ensuring high quality and safety. The steel is anti-vandalistic, requires minimal maintenance, and is fully recyclable. The high-quality paint ensures weather resistance and maintains a new appearance over time.



Land of Oz Roof

The Land of Oz roof adds a unique design to the play structure, inspired by the world of imagination, giving players the feeling of entering a magical realm. The roof provides shade and protection while enhancing the play experience with captivating storytelling.

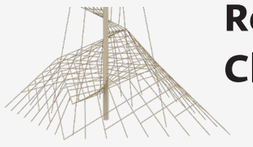

Rope Climbi

The rope climbing net offers a complex challenge that develops players' muscle strength, coordination, and balance. Climbing the net requires planning and forward thinking, encouraging players to overcome obstacles and develop problem-solving skills. The net allows players to experie

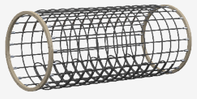

Crawl Tunnel

The crawl tunnel offers a physical challenge that develops players' motor skills, coordination, and balance. Players crawl through the tunnel and enjoy the sense of wonder and excitement as they enter from one side and exit from the other. Playing in the tunnel encourages exploration, daring, and self-confidence while maintaining a safe and enjoyable environment.

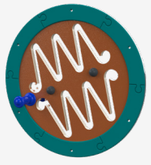

Play Panel

The play panel provides a variety of interactive play options that develop players' motor and cognitive skills. Each panel offers a unique activity that stimulates thinking and encourages players to learn and discover more.



Barrel Slide

The barrel slide provides an exciting and challenging sliding experience, combining movement with a sense of adventure. Sliding in this slide develops players' motor skills and coordination as they move through the tube at varying speeds. The sliding action boosts self-confidence and encourages daring as players face the challenge of fast movement. The slide is a fundamental and important element in any playground and is considered one of the leading and most beloved attractions for players of all ages.



Balcony

The balcony provides a cute and special play area that also allows for a moment of rest and observation of the surroundings. It adds a dimension of height and refreshes the play experience with a new perspective.



Toddler Slide

The toddler slide provides a safe and enjoyable sliding experience for little ones. It develops coordination, movement, balance, and self-confidence for young players.



Ventilation Window

A ventilation window provides a sense of openness and ventilates the structure, enhancing the play experience and adding an element of enjoyment and freshness. It also allows for maintaining eye contact between the player and companion, strengthening the sense of security.





Motor Development

Hand-eye coordination - Developing coordination and precision in activities requiring fine motor skills.

Cognitive Development

Curiosity - Encouraging exploration and discovery through equipment providing new and unfamiliar experiences. Creativity- Developing creative thinking and imagination in open and interactive play.

Emotional Development

Imagination- Encouraging imagination and creating play worlds. Courage- Facing fears and new challenges. Confidence- Building self-confidence and belief in one's personal abilities. Independence- Developing independence and the ability to make personal decisions.

Physical Development

Climbing - Strengthening arm and leg muscles, developing fitness and endurance. Sliding - Strengthening leg and arm muscles and improving coordination. Crawling - Strengthening abdominal and back muscles, improving coordination and flexibility. Balancing- Improving balance and posture.