TSP-10971

Memphis

Extreme play system model Memphis

Recycled HDPE:

Steel:

Rope Cables:

Balancing

Rotation

Climbing

Sliding

Crawling

Jumping



Ages 5-12

Users 141

Dimensions L: 28'-3.5" W: 48'-10" H: 17'-6" | cm L: 884 W: 1526 H: 547

Safety Zone 64'-0.5"/42'-3.1" | cm 1950.72 / 1287.78

Fall Height 9.28' | 290 cm

The Memphis structure is a unique challenging play system designed for children and youth, featuring a wide range of challenging elements such as an extreme maze, climbing, spinning, swinging, and sliding. The structure is specially designed to provide intense and dynamic play experiences, with an emphasis on physical and mental challenges. The Memphis is especially suitable for children and youth looking to combine fun, challenge, and excitement in physical activity and exploration of play spaces.

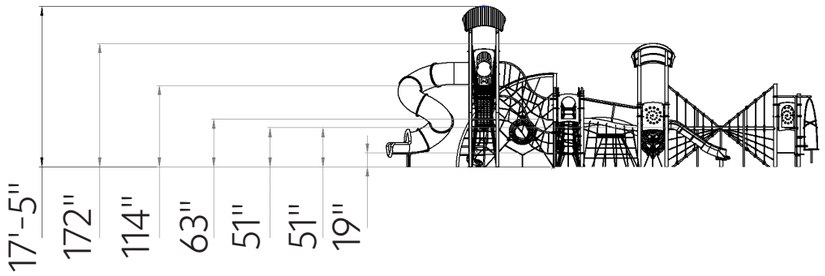

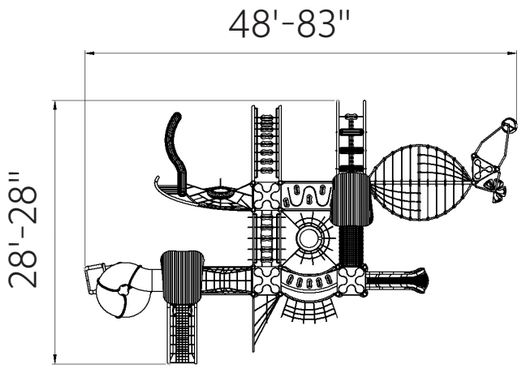

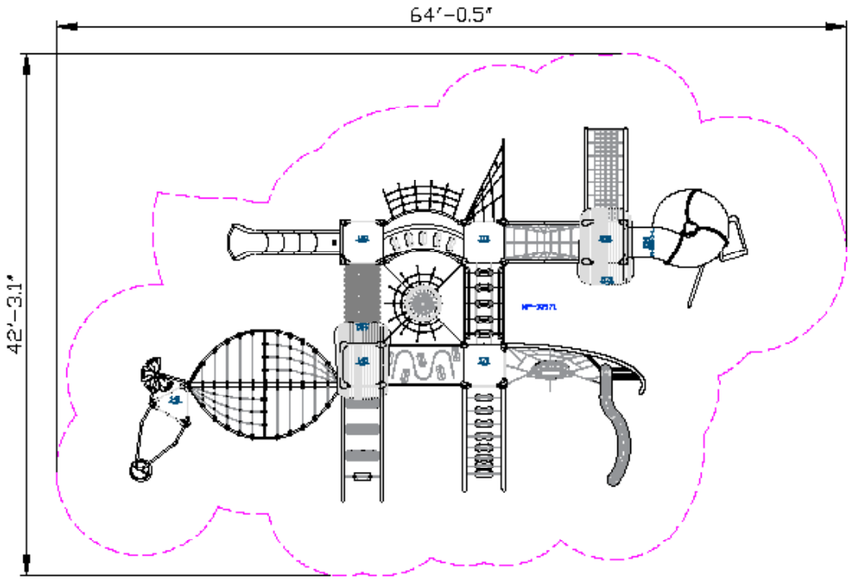





Rope Cables

Rope Cables are made of synthetic polypropylene (PP) fibers combined with a galvanized steel core for improved strength and durability. They meet strict standards, such as ASTM A240 and EN 10088, ensuring durability and safety for use in playground equipment. . The cables offer a soft and pleasant touch that does not harm the hands during use and are available in various diameters and colors, allowing for creative and aesthetic design.



Recycled HDPE

HDPE (High-Density Polyethylene) is a recycled material made from high-density polyethylene, produced from recycled materials that allows for further recycling. It excels in resistance to UV rays and wear and tear, making it particularly suitable for use in outdoor playground equipment. Its touch is smooth and pleasant, and its appearance is maintained over time. The advantages include high resistance to harsh weather conditions and environmental preservation. The material is capable of absorbing high energy, which helps prevent fractures.



Steel

Steel structure that is strong and durable, oven-painted galvanized and coated with lead-free polyester powder for corrosion and rust resistance. The steel meets strict EN 1176 standards, ensuring high quality and safety. The steel is anti-vandalistic, requires minimal maintenance, and is fully recyclable. The high-quality paint ensures weather resistance and maintains a new appearance over time.

Roof



The roof provides shade and protection from the sun and rain, allowing players to enjoy play in comfortable conditions. In addition to its functional role, the roof is designed to enhance the look of the structure and align with the story told by the design of the play structure. The roof design contributes to creating an engaging and unique play environment that stimulates imagination and enriches the players' play experience.

Bird’s Nest Seat



The bird's nest seat is designed as a spacious and accommodating rope basket, allowing players to sit comfortably. It provides a sense of safety and stability during play, encouraging social interactions as players sit together and enjoy the structure.

Rope Climbi

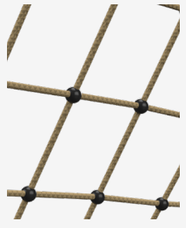

The rope climbing net offers a complex challenge that develops players' muscle strength, coordination, and balance. Climbing the net requires planning and forward thinking, encouraging players to overcome obstacles and develop problem-solving skills. The net allows players to experie

Barrel Slide



The barrel slide provides an exciting and challenging sliding experience, combining movement with a sense of adventure. Sliding in this slide develops players' motor skills and coordination as they move through the tube at varying speeds. The sliding action boosts self-confidence and encourages daring as players face the challenge of fast movement. The slide is a fundamental and important element in any playground and is considered one of the leading and most beloved attractions for players of all ages.

Clear Bubble



The clear bubble offers a unique vantage point, allowing players to see their surroundings from a different perspective, maintaining eye contact between the companion and the player and ensuring continuous, safe communication. The clear bubble enhances the sense of security for players and companions, especially in cases of young children needing support and supervision during play.

Springy Mat



The springy mat encourages players to jump and move. Playing on the springy mat develops

Slide



A slide is a fundamental and important element in any playground, considered one of the leading and most beloved attractions for players of all ages. The slide provides an enjoyable and exciting sliding experience that develops players' motor skills and coordination. Playing on the slide encourages movement, daring, and self-confidence.

Plastic Transition Element



A play element offering a challenging transition experience that develops players' motor skills. It encourages players to use creativity and think outside the box.





Motor Development

Core muscle strengthening- Strengthening abdominal and back muscles through challenging equipment. Foot-eye coordination - Improving coordination and balance through various equipment. Hand-eye coordination - Developing coordination and precision in activities requiring fine motor skills.

Physical Development

Climbing - Strengthening arm and leg muscles, developing fitness and endurance Balancing- Improving balance and posture. Sliding - Strengthening leg and arm muscles and improving coordination. Crawling - Strengthening abdominal and back muscles, improving coordination and flexibility. Jumping- Improving leg strength and balance.

Social Development

Communication- Developing effective and clear communication skills with playmates. Respect for boundaries- Learning the importance of respecting personal and social boundaries. Friendship creation- Creating friendships and strengthening social bonds.

Emotional Development

Imagination- Encouraging imagination and creating play worlds. Courage- Facing fears and new challenges. Confidence- Building self-confidence and belief in one's personal abilities. Independence- Developing independence and the ability to make personal decisions. Resilience- Coping with failure and trying again.