TSP-10971B

Memphis

Extreme play system model Memphis

Recycled HDPE:

Steel:

Rope Cables:

Balancing

Crawling

Swinging

Rotation

Jumping



Ages 5-12

Users 141

Dimensions L: 28'-1.9" W: 50'-0.6" H: 17'-6" | cm L: 880 W: 1564 H: 547

Safety Zone 42'-1.3"/65'-9.5" | cm 1282.7 / 2004.06

Fall Height 9.28' | 290 cm

Accessible

The Memphis is an inclusive unique challenging play system designed for children and youth, featuring a wide range of engaging elements such as an extreme maze, climbing, spinning, swinging, and sliding. The structure is specially designed to provide intensive and dynamic play experiences, with emphasis on physical engagement and thinking challenges. As an inclusive play system Memphis is particularly suitable for children and youth looking to combine fun, challenge, and excitement in physical activity and exploration of play spaces, while also offering access to children with special needs.

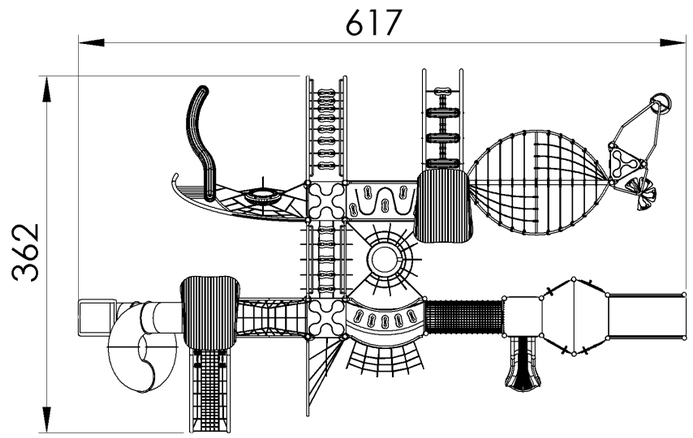

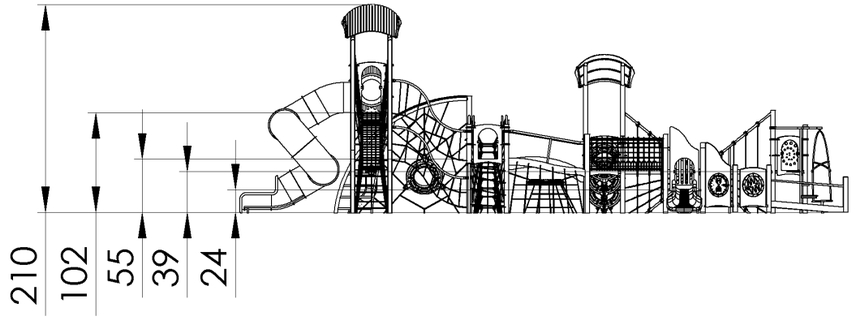





Rope Cables

Rope Cables are made of synthetic polypropylene (PP) fibers combined with a galvanized steel core for improved strength and durability. They meet strict standards, such as ASTM A240 and EN 10088, ensuring durability and safety for use in playground equipment. . The cables offer a soft and pleasant touch that does not harm the hands during use and are available in various diameters and colors, allowing for creative and aesthetic design.



Recycled HDPE

HDPE (High-Density Polyethylene) is a recycled material made from high-density polyethylene, produced from recycled materials that allows for further recycling. It excels in resistance to UV rays and wear and tear, making it particularly suitable for use in outdoor playground equipment. Its touch is smooth and pleasant, and its appearance is maintained over time. The advantages include high resistance to harsh weather conditions and environmental preservation. The material is capable of absorbing high energy, which helps prevent fractures.



Steel

Steel structure that is strong and durable, oven-painted galvanized and coated with lead-free polyester powder for corrosion and rust resistance. The steel meets strict EN 1176 standards, ensuring high quality and safety. The steel is anti-vandalistic, requires minimal maintenance, and is fully recyclable. The high-quality paint ensures weather resistance and maintains a new appearance over time.

Accessibility Platform



The accessibility platform is a structure that is accessible for children with disabilities, allowing them to participate in play equally and safely. It is an ideal addition to any structure and playground that requires accessibility standards.

Designed Climbing Element



The designed climbing element combines physical challenge with a unique and inviting design. Players develop physical skills such as strength, coordination, and balance while playing in a creative and designed environment. The unique design encourages players to play and explore, fostering their imagination and creativity.

Ventilation Window

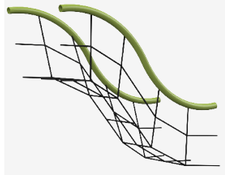

The inclined bridge offers a physical challenge that develops players' motor skills and balance. The bridge connects two levels at different heights within the play structure, allowing safe and convenient passage between them. Ascending the bridge adds a sense of adventure and challenge as players learn to maintain stability and confidence during the crossing. Playing on the bridge encourages daring and perseverance as players tackle the climb and height.

Accessibility Ramp

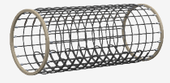

The accessibility ramp provides easy and safe access for wheelchairs, allowing players with disabilities to move easily and integrate smoothly into the games. Its design ensures stability and security, allowing everyone to enjoy the play experience equally and accessibly.

Slide



A slide is a fundamental and important element in any playground, considered one of the leading and most beloved attractions for players of all ages. The slide provides an enjoyable and exciting sliding experience that develops players' motor skills and coordination. Playing on the slide encourages movement, daring, and self-confidence.

Springy Mat



The springy mat encourages players to jump and move. Playing on the springy mat develops

Transparent Slide Sections



Transparent slide sections add an interesting visual element to slides. The transparency of the sections allows for maintaining eye contact between the companion and the player during the slide, enhancing the sense of security and comfort for both parties. The transparent sections provide a unique and enjoyable sliding experience while maintaining a sense of connection and safety.

Rope Climbi

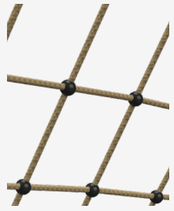

The rope climbing net offers a complex challenge that develops players' muscle strength, coordination, and balance. Climbing the net requires planning and forward thinking, encouraging players to overcome obstacles and develop problem-solving skills. The net allows players to experie





Motor Development

Foot-eye coordination - Improving coordination and balance through various equipment. Hand-eye coordination - Developing coordination and precision in activities requiring fine motor skills.

Cognitive Development

Curiosity - Encouraging exploration and discovery through equipment providing new and unfamiliar experiences. Creativity- Developing creative thinking and imagination in open and interactive play.

Emotional Development

Imagination- Encouraging imagination and creating play worlds. Courage- Facing fears and new challenges. Confidence- Building self-confidence and belief in one's personal abilities. Independence- Developing independence and the ability to make personal decisions. Resilience- Coping with failure and trying again.

Social Development

Communication- Developing effective and clear communication skills with playmates Conflict resolution- Learning to resolve disputes and manage conflicts positively. Empathy- Developing empathy and the ability to understand and empathize with others' feelings. Respect for boundaries- Learning the importance of respecting personal and social boundaries. Friendship creation- Creating friendships and strengthening social bonds.

Physical Development

Climbing - Strengthening arm and leg muscles, developing fitness and endurance Crawling - Strengthening abdominal and back muscles, improving coordination and flexibility. Balancing- Improving balance and posture. Sliding - Strengthening leg and arm muscles and improving coordination. Spinning - Improving balance and vestibular functions through carousels.