TSP-10983

Kent

Extreme play system model Kent

Recycled HDPE:

Steel:

Rope Cables:

Crawling

Balancing

Climbing

Sliding

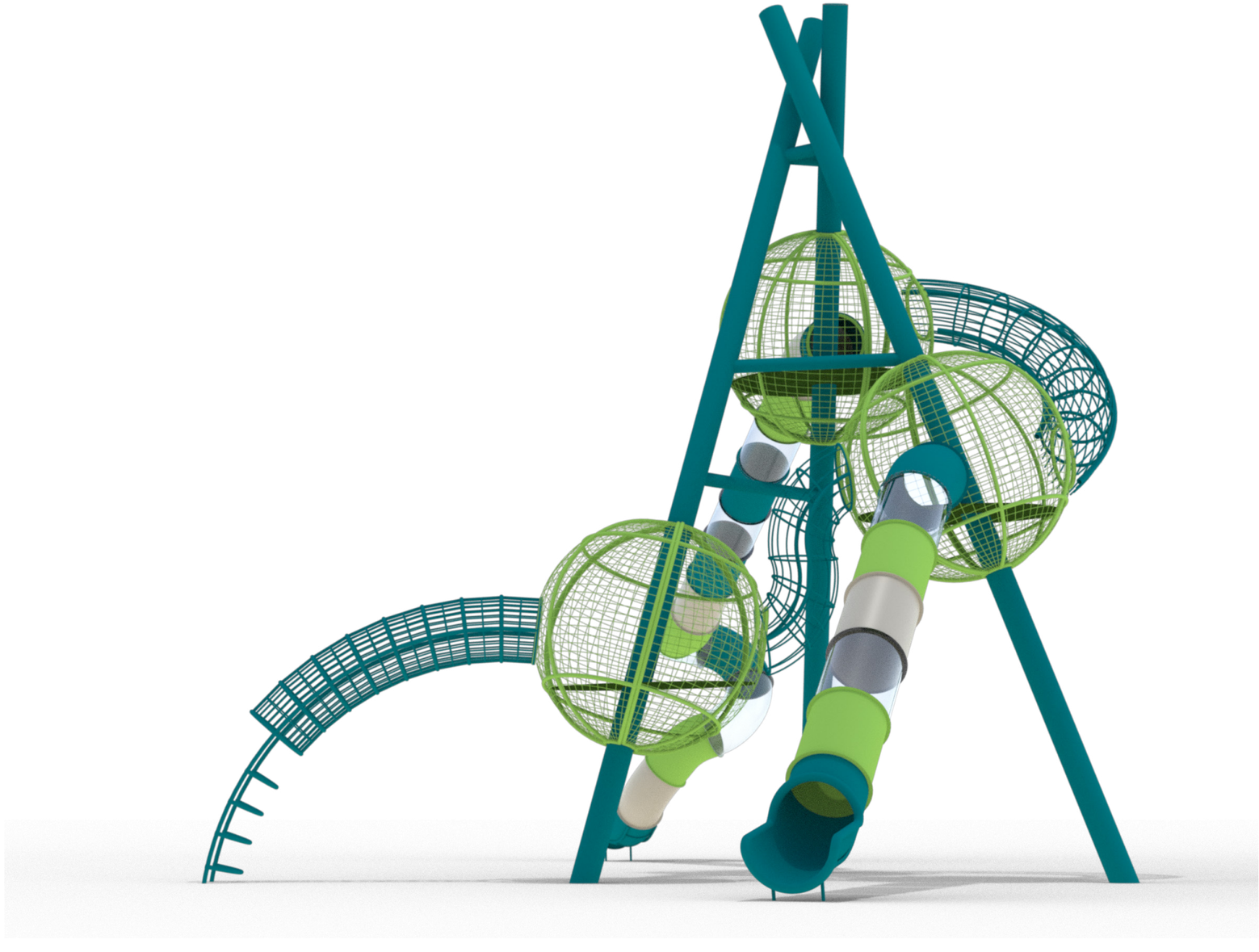

Ages 5-12

Users 59

Dimensions L: 69'-87" W: 36'-3.1" H: 35'-6.6" | cm L: 2179 W: 1133 H: 1111

Safety Zone 1078"/557" | cm 2739 / 1416

Fall Height 8" | 250 cm

The Kent is a multi-level climbing play strucutre that includes balls connected by bridges and climbing nets. The structure provides children with a challenging and enjoyable experience of climbing between the balls, navigating through net tunnels, and enjoying fast slides. The tall and complex design combines intense physical play with imagination, encouraging users to explore the space safely and thoughtfully. It is suitable for children of various ages and helps develop coordination, balance, and strength.

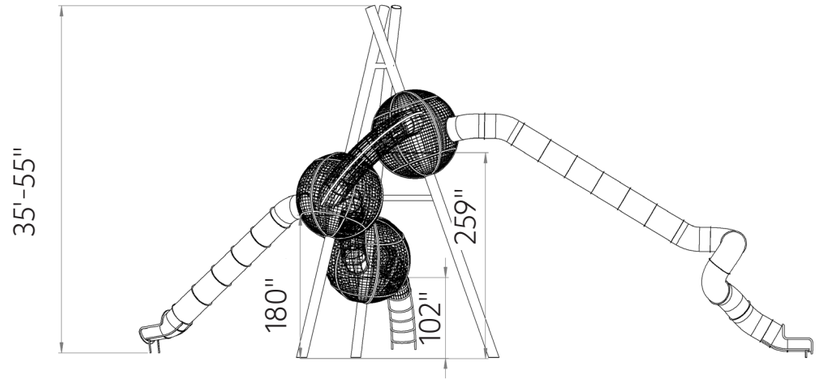

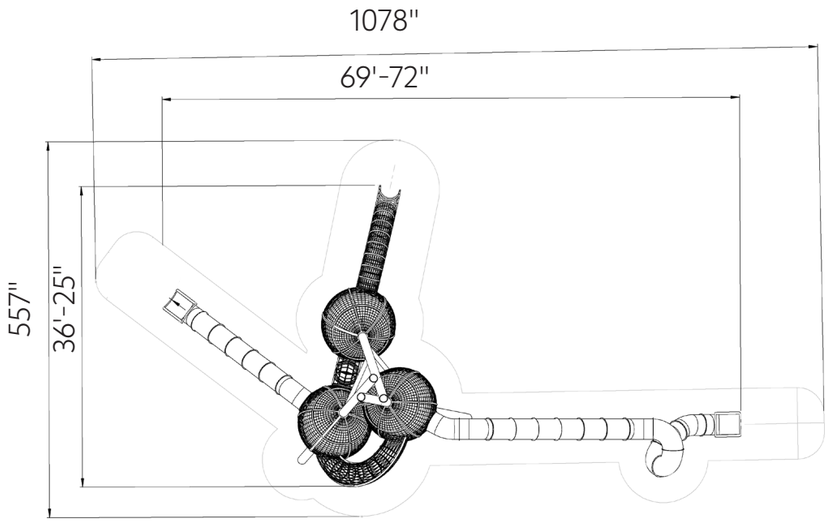

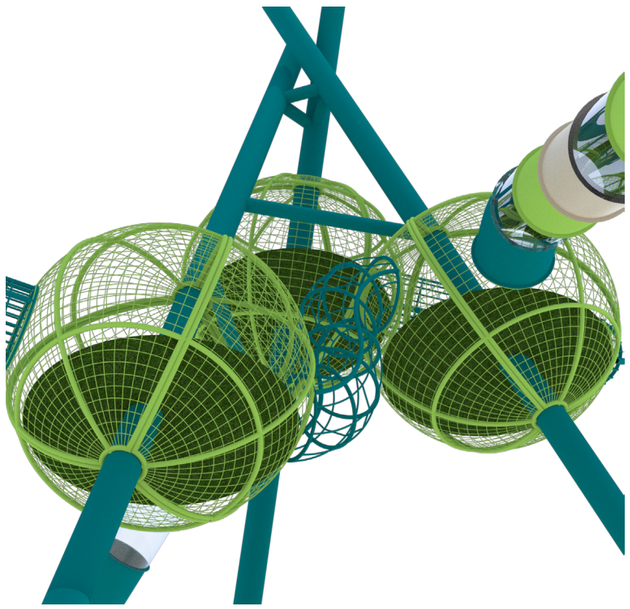



Rope Cables

Rope Cables are made of synthetic polypropylene (PP) fibers combined with a galvanized steel core for improved strength and durability. They meet strict standards, such as ASTM A240 and EN 10088, ensuring durability and safety for use in playground equipment. . The cables offer a soft and pleasant touch that does not harm the hands during use and are available in various diameters and colors, allowing for creative and aesthetic design.



Steel

Steel structure that is strong and durable, oven-painted galvanized and coated with lead-free polyester powder for corrosion and rust resistance. The steel meets strict EN 1176 standards, ensuring high quality and safety. The steel is anti-vandalistic, requires minimal maintenance, and is fully recyclable. The high-quality paint ensures weather resistance and maintains a new appearance over time.



Recycled HDPE

HDPE (High-Density Polyethylene) is a recycled material made from high-density polyethylene, produced from recycled materials that allows for further recycling. It excels in resistance to UV rays and wear and tear, making it particularly suitable for use in outdoor playground equipment. Its touch is smooth and pleasant, and its appearance is maintained over time. The advantages include high resistance to harsh weather conditions and environmental preservation. The material is capable of absorbing high energy, which helps prevent fractures.



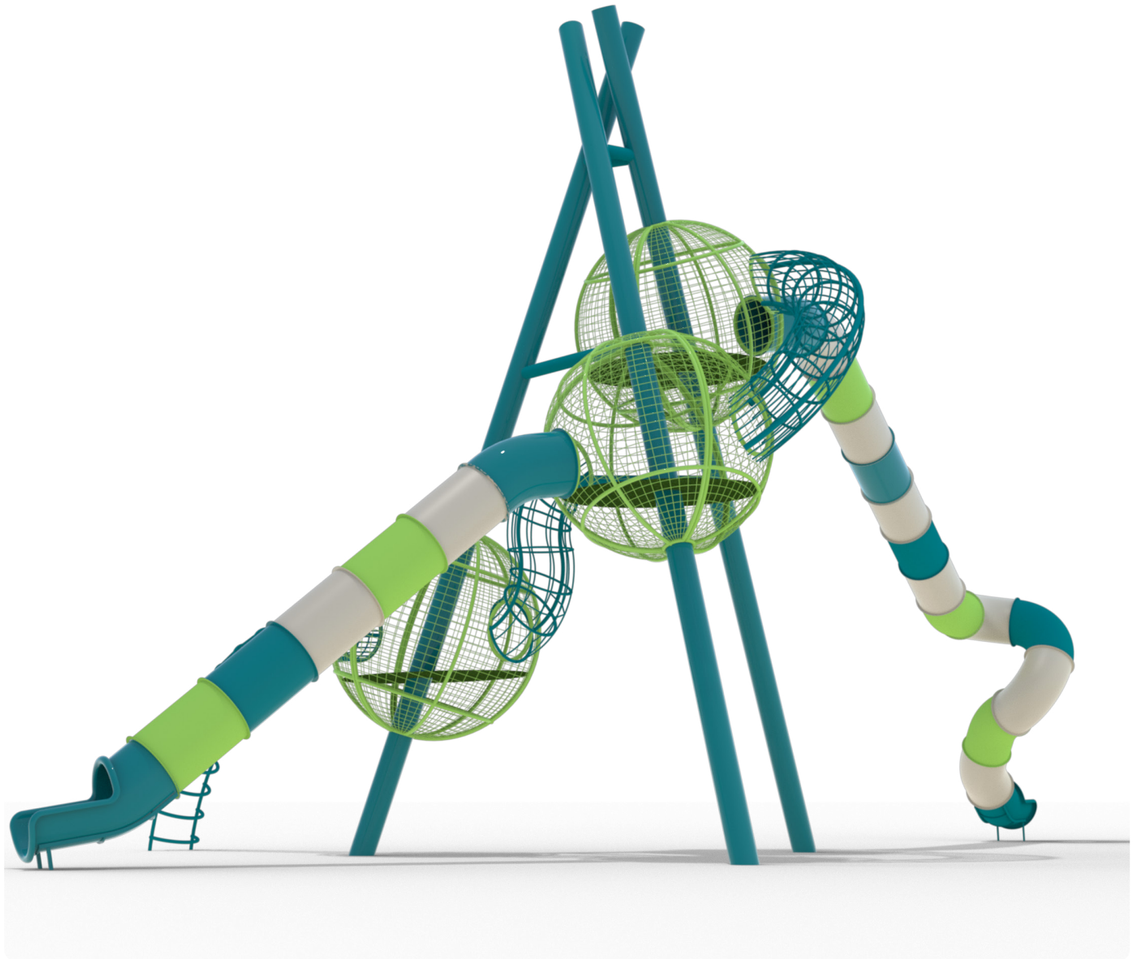

Motor Development

Core muscle strengthening- Strengthening abdominal and back muscles through challenging equipment. Foot-eye coordination - Improving coordination and balance through various equipment. Hand-eye coordination - Developing coordination and precision in activities requiring fine motor skills.

Physical Development

Climbing - Strengthening arm and leg muscles, developing fitness and endurance Balancing- Improving balance and posture. Sliding - Strengthening leg and arm muscles and improving coordination. Crawling - Strengthening abdominal and back muscles, improving coordination and flexibility.

Cognitive Development

Concentration- Developing the ability to focus and maintain attention in equipment requiring concentration. Spatial awareness- Improving the ability to understand and navigate space through mazes and courses..

For illustration purposes only ADA Kent TSP-10983 4/4 TM