TSP-10989

Witch’s Lair

Challenging rope play system model Witch's Lair

Recycled HDPE:

Steel:

Rope Cables:

Balancing

Climbing

Sliding



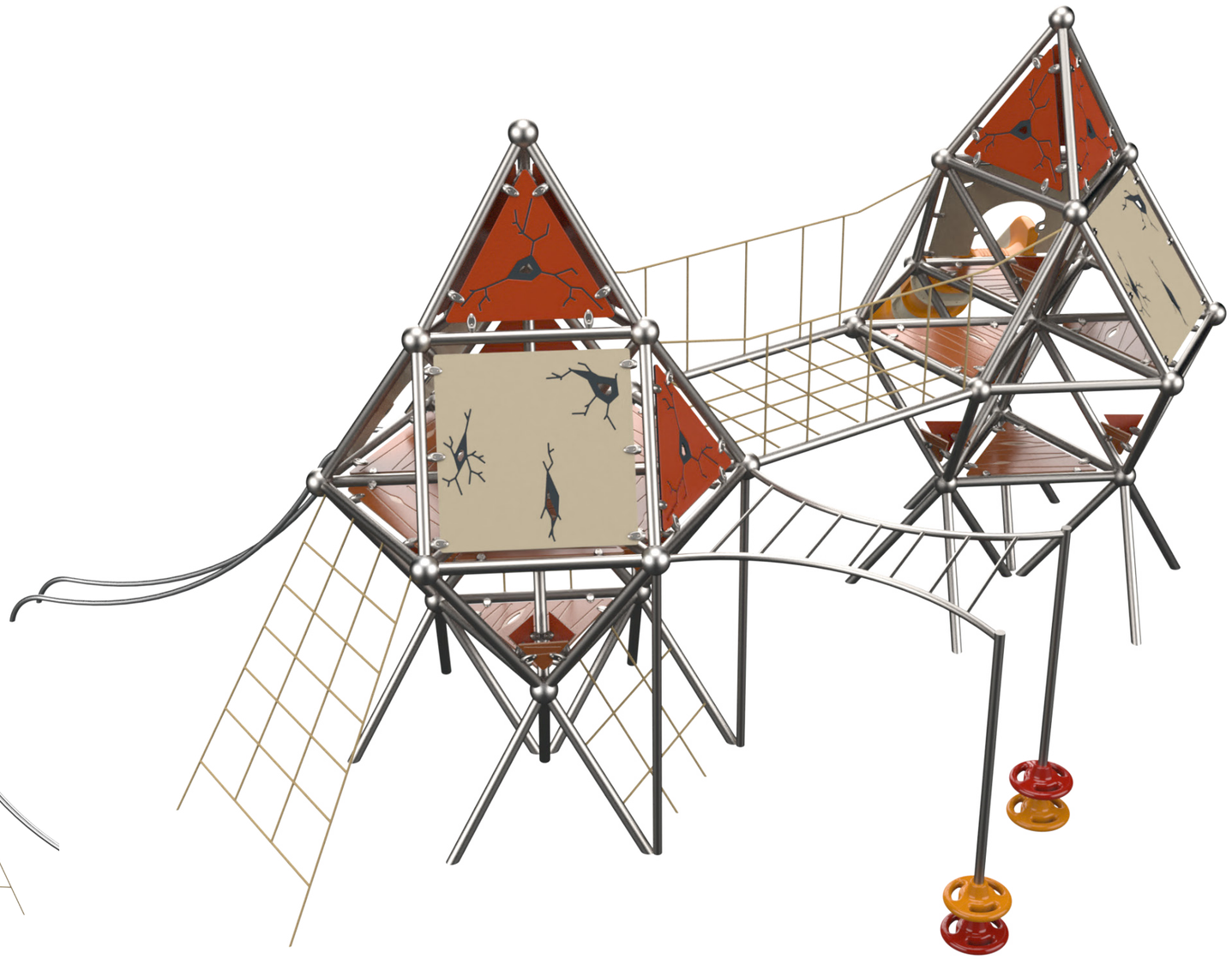

Ages 5-12

Users 66

Dimensions L: 28'-10.4" W: 31'-4.7" H: 13'-10.3" | cm L: 902 W: 981 H: 433

Safety Zone 46'-10.5"/44'-6.4" | cm 1427.48 / 1356.36

Fall Height 6.72' | 210 cm

This is a large challenging play structure designed in the Sloppy Style. This style breaks conventions with a seemingly messy appearance, looking crooked and broken with elements inspired by fairy tales. The structure is designed as two large diamond cabins connected by a wide cable bridge. Each diamond includes several graded climbing levels that create a unique play experience. Various climbing elements of different heights, open slides, and slanted standing spin elements are attached to the diamond cabins. The structure challenges and develops both mental and physical flexibility, contributes to self-confidence, and strengthens muscles.

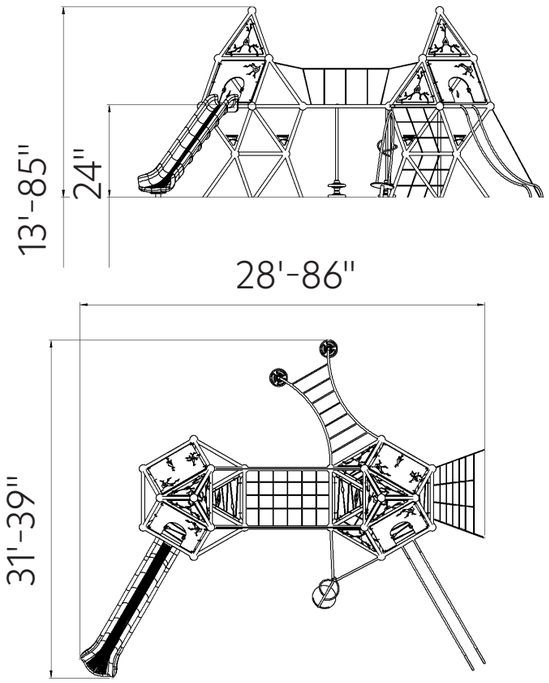

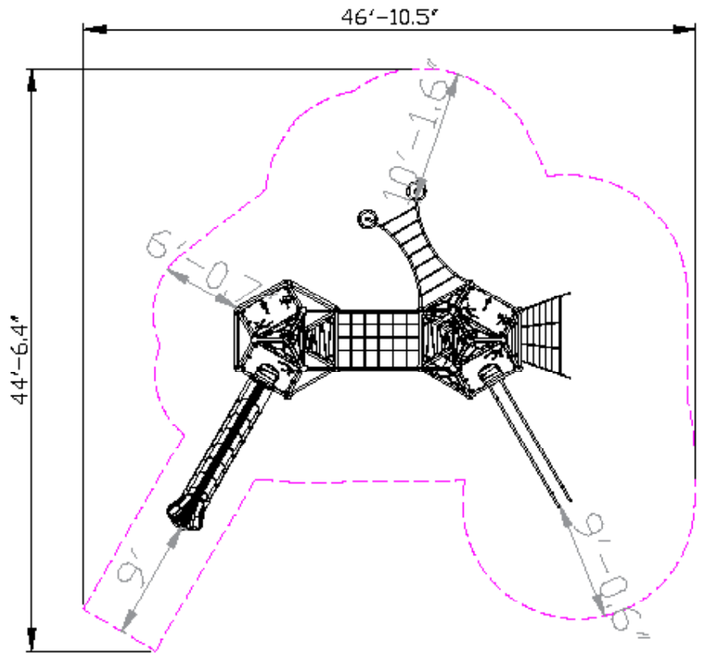





Steel

Steel structure that is strong and durable, oven-painted galvanized and coated with lead-free polyester powder for corrosion and rust resistance. The steel meets strict EN 1176 standards, ensuring high quality and safety. The steel is anti-vandalistic, requires minimal maintenance, and is fully recyclable. The high-quality paint ensures weather resistance and maintains a new appearance over time.



Recycled HDPE

HDPE (High-Density Polyethylene) is a recycled material made from high-density polyethylene, produced from recycled materials that allows for further recycling. It excels in resistance to UV rays and wear and tear, making it particularly suitable for use in outdoor playground equipment. Its touch is smooth and pleasant, and its appearance is maintained over time. The advantages include high resistance to harsh weather conditions and environmental preservation. The material is capable of absorbing high energy, which helps prevent fractures.



Rope Cables

Rope Cables are made of synthetic polypropylene (PP) fibers combined with a galvanized steel core for improved strength and durability. They meet strict standards, such as ASTM A240 and EN 10088, ensuring durability and safety for use in playground equipment. . The cables offer a soft and pleasant touch that does not harm the hands during use and are available in various diameters and colors, allowing for creative and aesthetic design.

Rope Ladder



The rope ladder provides vertical access to the play structure and encourages players to develop physical skills such as strength, coordination, and balance. Climbing the rope ladder strengthens hand and leg muscles and develops a sense of balance. The ladder encourages players to face challenges and develop flexibility and agility.

Climbing Element



The climbing element offers a physical challenge that develops muscle strength, coordination, and balance. Climbing on the element encourages children to overcome fears and build self-confidence and perseverance. Additionally, the element helps develop problem-solving skills as children look for efficient and safe ways to climb.

Slide Boards



The slide boards provide an exciting sliding experience that combines fast movement and fun, and they also offer a challenging climbing option that develops players' motor skills and balance. Playing on the slide boards encourages players to take risks and improve their body control skills.

Slide



A slide is a fundamental and important element in any playground, considered one of the leading and most beloved attractions for players of all ages. The slide provides an enjoyable and exciting sliding experience that develops players' motor skills and coordination. Playing on the slide encourages movement, daring, and self-confidence.

Hand Walking Element



The hand-walking element strengthens upper body strength and develops coordination and balance in players. By moving using only their hands, players learn to control their movements, improve their motor skills, and strengthen their arms and shoulders. The height effect and the fact that their feet do not touch the ground add an extra dimension of challenge, requiring players to maintain balance and build self-confidence as they tackle a significant physical challenge.

Net Floor

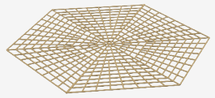

The net floor offers players a fascinating experience that combines stability and challenge. The floor is made of rope netting, providing a sensation of light hovering above the ground. Playing on the net floor develops balance, coordination, and self-confidence in the players.



Motor Development

Core muscle strengthening- Strengthening abdominal and back muscles through challenging equipment. Foot-eye coordination - Improving coordination and balance through various equipment. Hand-eye coordination - Developing coordination and precision in activities .requiring fine motor skills



Physical Development

Climbing - Strengthening arm and leg muscles, developing fitness and endurance Balancing- Improving balance and posture. Sliding - Strengthening leg and arm muscles and improving coordination.