TSP-2537

Serpent Slide

Toddler structure model Serpent Slide

Recycled HDPE:

Steel:

Balancing

Sliding

Climbing



Ages 2-5

Users 4

Dimensions L: 2'-1.3" W: 16'-2.3" H: 3'-1.2" | cm L: 66 W: 506 H: 97

Safety Zone 13'-10.9"/28'-6.1" | cm 422 / 869

Fall Height 1'-11" | 60 cm

Accessible

This play structure is made of durable materials, including galvanized steel and HDPE panels. It features a snake-shaped climbing and sliding surface with a 60 cm high wave slide. The unique and fun design encourages imagination and mental development as they mentally complete the hidden parts of the snake. The structure supports cooperative play for multiple children at once and helps develop arm and leg muscles, as well as posture and balance.

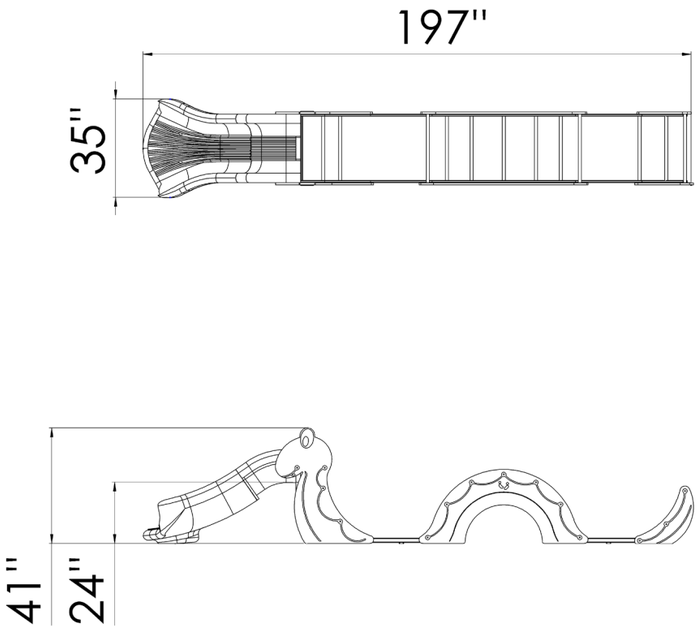

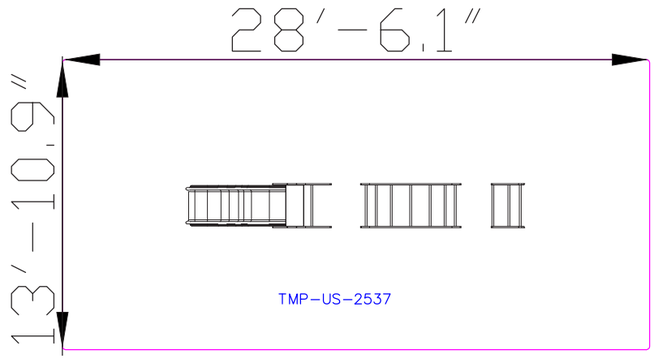





Recycled HDPE

HDPE (High-Density Polyethylene) is a recycled material made from high-density polyethylene, produced from recycled materials that allows for further recycling. It excels in resistance to UV rays and wear and tear, making it particularly suitable for use in outdoor playground equipment. Its touch is smooth and pleasant, and its appearance is maintained over time. The advantages include high resistance to harsh weather conditions and environmental preservation. The material is capable of absorbing high energy, which helps prevent fractures.



Steel

Steel structure that is strong and durable, oven-painted galvanized and coated with lead-free polyester powder for corrosion and rust resistance. The steel meets strict EN 1176 standards, ensuring high quality and safety. The steel is anti-vandalistic, requires minimal maintenance, and is fully recyclable. The high-quality paint ensures weather resistance and maintains a new appearance over time.

Ladder



The ladder provides vertical access to the play structure and encourages players to develop physical skills such as strength, coordination, and balance. Climbing the ladder promotes courage and independence as players face heights and new challenges. The ladder strengthens hand and arm muscles and encourages proper body use.

Toddler Slide



The toddler slide provides a safe and enjoyable sliding experience for little ones. It develops coordination, movement, balance, and self-confidence for young players.

Hand and Foot Holds



Hand and foot holds provide support during play and use of the structure. Players develop their strength and coordination while maintaining stability and security.

Engravings



Engravings add designs and illustrations to parts of the structure, enriching the play experience with an interesting visual element.

Cognitive Development

Spatial awareness- Improving the ability to understand and navigate space through mazes and courses.. Curiosity - Encouraging exploration and discovery through equipment providing new and unfamiliar experiences.

Emotional Development

Imagination- Encouraging imagination and creating play worlds. Empathy- Developing the ability to understand and accept differences and complexities.

Physical Development

Climbing - Strengthening arm and leg muscles, developing fitness and endurance Sliding - Strengthening leg and arm muscles and improving coordination.

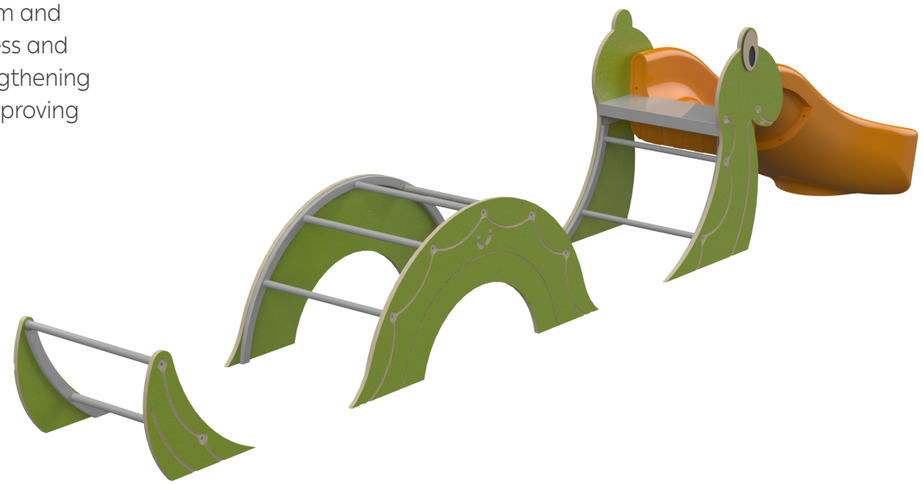

For illustration purposes only ADA

Serpent Slide TSP-2537 3/3 TM