TSP-2537B

Serpent Slide B

A snake-shaped climbing and sliding structure designed for toddlers and young children. The wide and low slide provides a safe and enjoyable sliding experience, while the special snake-shaped design adds an exciting and imaginative element to the play. The structure is particularly suited for developing coordination, balance, and the arm and leg muscles of toddlers.

Recycled HDPE:

Steel:

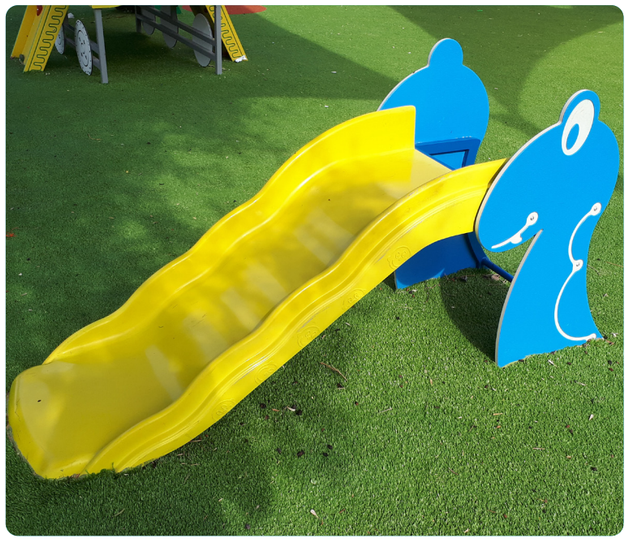



Balancing

Sliding

Climbing

Ages 2-5

Users 3

Dimensions L: 2'-1.3" W: 6'-11.7" H: 3'-1.2" | cm L: 66 W: 218 H: 97

Fall Height 1'-11" | 60 cm

Accessible



Toddler Slide

The toddler slide provides a safe and enjoyable sliding experience for little ones. It develops coordination, movement, balance, and self-confidence for young players.



Engravings

Engravings add designs and illustrations to parts of the structure, enriching the play experience with an interesting visual element.



Ladder

The ladder provides vertical access to the play structure and encourages players to develop physical skills such as strength, coordination, and balance. Climbing the ladder promotes courage and independence as players face heights and new challenges. The ladder strengthens hand and arm muscles and encourages proper body use.

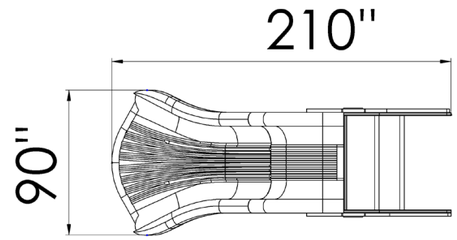

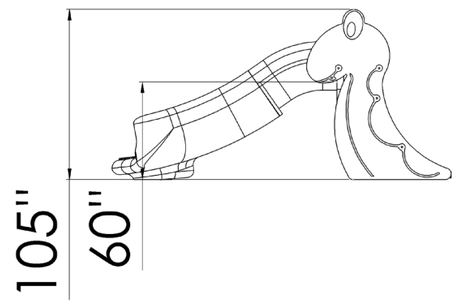



Recycled HDPE

HDPE (High-Density Polyethylene) is a recycled material made from high-density polyethylene, produced from recycled materials that allows for further recycling. It excels in resistance to UV rays and wear and tear, making it particularly suitable for use in outdoor playground equipment. Its touch is smooth and pleasant, and its appearance is maintained over time. The advantages include high resistance to harsh weather conditions and environmental preservation. The material is capable of absorbing high energy, which helps prevent fractures.



Steel

Steel structure that is strong and durable, oven-painted galvanized and coated with lead-free polyester powder for corrosion and rust resistance. The steel meets strict EN 1176 standards, ensuring high quality and safety. The steel is anti-vandalistic, requires minimal maintenance, and is fully recyclable. The high-quality paint ensures weather resistance and maintains a new appearance over time.



Cognitive Development

Spatial awareness- Improving the ability to understand and navigate space through mazes and courses.. Curiosity - Encouraging exploration and discovery through equipment providing new and unfamiliar experiences.



Emotional Development

Perseverance- Encouraging perseverance and repeated attempts. Achievement- Developing a sense of accomplishment and satisfaction from success in challenging equipment.



Sliding - Strengthening leg and arm muscles and improving coordination. Climbing - Strengthening arm and leg muscles, developing fitness and endurance.