TSP-2558

Mount Elbert

Toddler strucuture model Mount Elbert

Steel:

Balancing Rotation Sliding Jumping

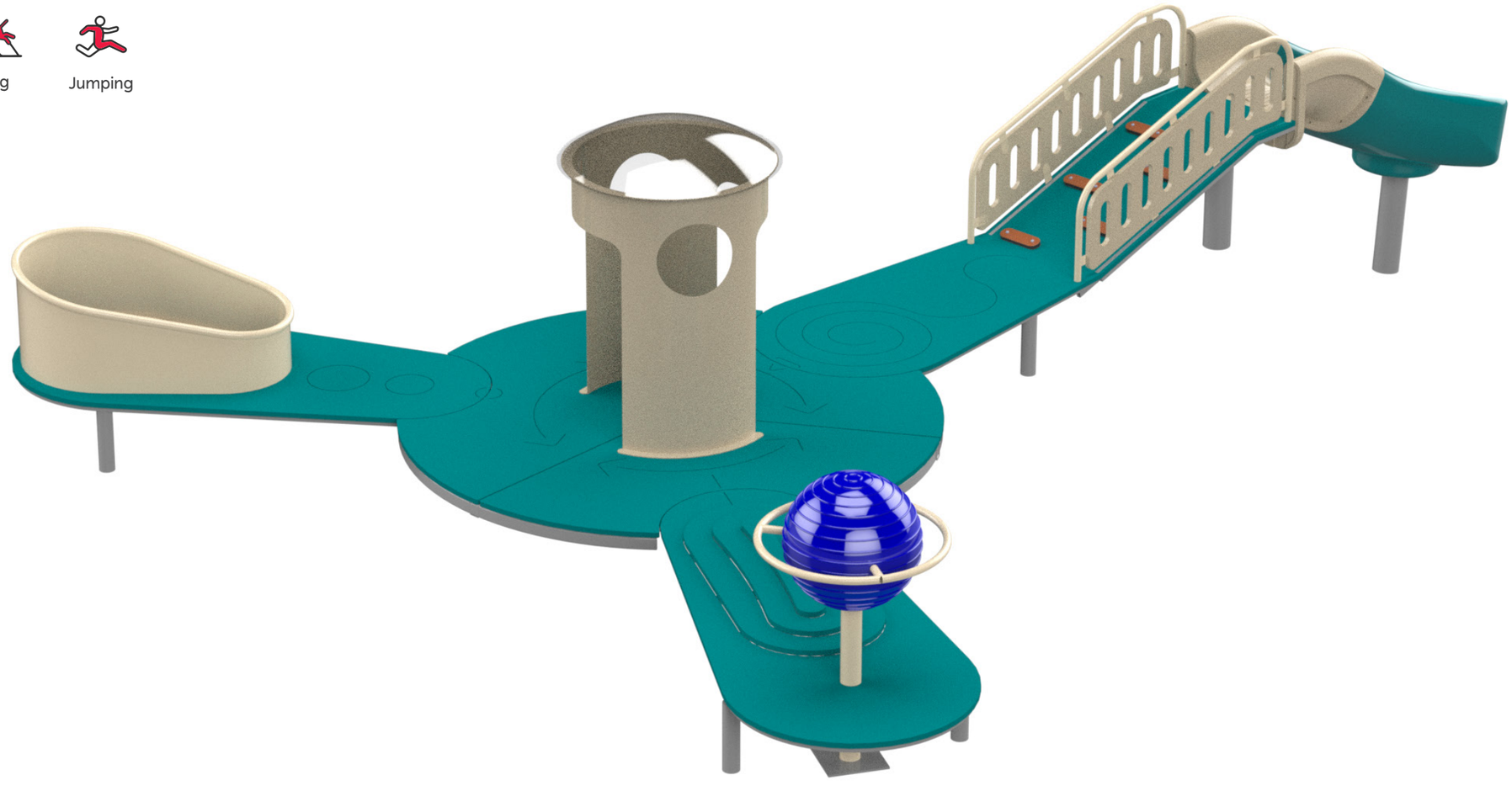

Ages 2-5 | Users 16 | Dimensions L: 15'-10.1" W: 23'-5.9" H: 4'-1.9" | cm L: 495 W: 734 H: 130 | Safety Zone 30'-1.2"/ 38'-7.6" | cm 1176 / 917 | Fall Height 1'-11" | 60 cm | Accessible

Mount Elbert is a playset designed for toddlers, featuring a soothing and functional design suited to the needs of young children. The structure includes a variety of wide paths, small slides, and play circles, allowing children to discover the environment in a safe and enjoyable way.

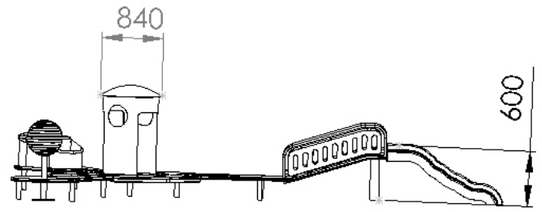

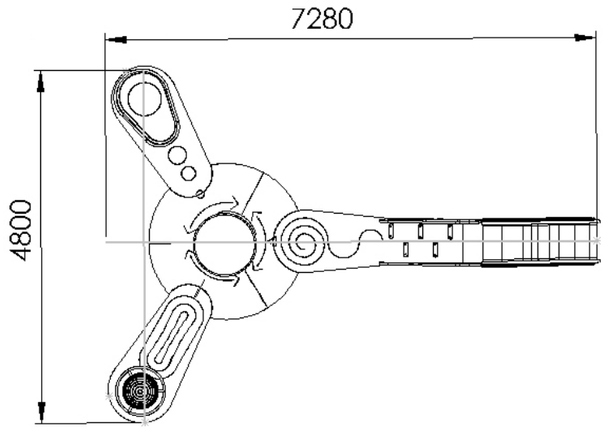

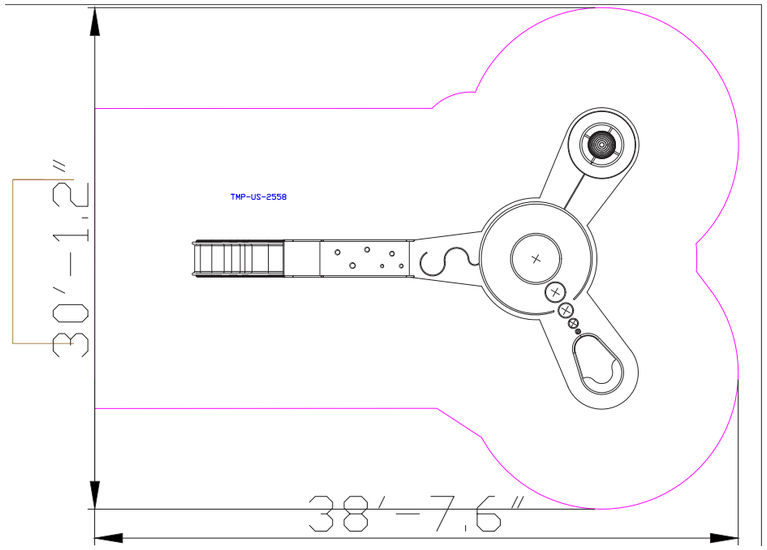





Steel

Steel structure that is strong and durable, oven-painted galvanized and coated with lead-free polyester powder for corrosion and rust resistance. The steel meets strict EN 1176 standards, ensuring high quality and safety. The steel is anti-vandalistic, requires minimal maintenance, and is fully recyclable. The high-quality paint ensures weather resistance and maintains a new appearance over time.

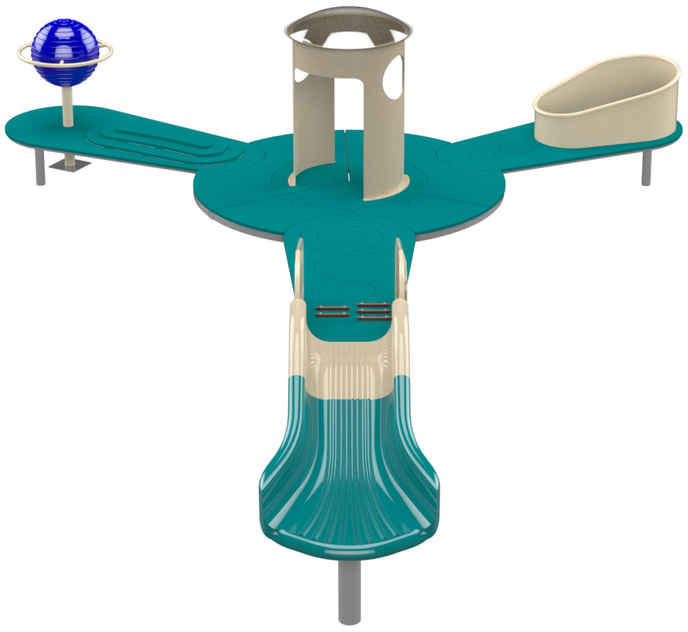

Toddler Slide



The toddler slide provides a safe and enjoyable sliding experience for little ones. It develops coordination, movement, balance, and self-confidence for young players.

Clear Bubble



The clear bubble offers a unique vantage point, allowing players to see their surroundings from a different perspective, maintaining eye contact between the companion and the player and ensuring continuous, safe communication. The clear bubble enhances the sense of security for players and companions, especially in cases of young children needing support and supervision during play.

Overlays



Unique and designed visual elements that enhance the overall appearance of the structure. The overlays are durable and add an extra layer of creativity and enriching play experience for players.

Engravings



Engravings add designs and illustrations to parts of the structure, enriching the play experience with an interesting visual element.

Moving Game



The moving game provides dynamic activity that develops players' coordination, strength, and motor skills.



Cognitive Development

Regulation of force- Developing the ability to apply the right amount of force according to the activity. Concentration- Developing the ability to focus and maintain attention in equipment requiring concentration.



Emotional Development

Courage- Facing fears and new challenges. Confidence- Building self-confidence and belief in one's personal abilities.Independence- Developing independence and the ability to make personal decisions.



Physical Development

Crawling - Strengthening abdominal and back muscles, improving coordination and flexibility. Spinning - Improving balance and vestibular functions through carousels.Sliding - Strengthening leg and arm muscles and improving coordination.