TSP-2575

Biplane

Toddler strucutre model Biplane

Recycled HDPE:

Steel:

Climbing

Jumping



Ages 2-5

Users 10

Dimensions L: 9'-4.5" W: 8'-11.5" H: 5'-6" | cm L: 293 W: 280 H: 172

Safety Zone 21'-7.2"/20'-10.9" | cm 658 / 635

Fall Height 3'-2.4" | 100 cm

Accessible

A plane-shaped play structure made of HDPE. The plane has three seats, two steering wheels, and two gear shifts to enhance the flying and transportation experience. On both sides of the plane are elements for play. The structure develops creativity and imagination, and encourages young children to aim high.

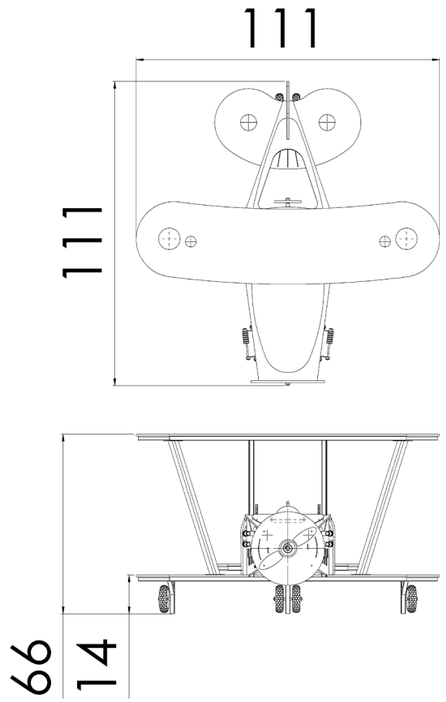

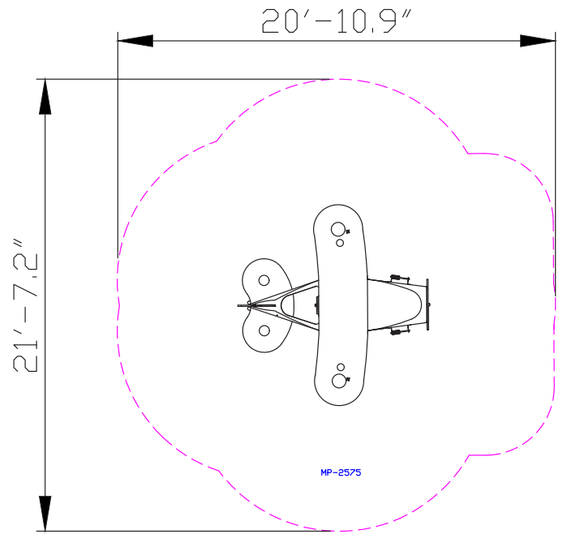





Recycled HDPE

HDPE (High-Density Polyethylene) is a recycled material made from high-density polyethylene, produced from recycled materials that allows for further recycling. It excels in resistance to UV rays and wear and tear, making it particularly suitable for use in outdoor playground equipment. Its touch is smooth and pleasant, and its appearance is maintained over time. The advantages include high resistance to harsh weather conditions and environmental preservation. The material is capable of absorbing high energy, which helps prevent fractures.



Steel

Steel structure that is strong and durable, oven-painted galvanized and coated with lead-free polyester powder for corrosion and rust resistance. The steel meets strict EN 1176 standards, ensuring high quality and safety. The steel is anti-vandalistic, requires minimal maintenance, and is fully recyclable. The high-quality paint ensures weather resistance and maintains a new appearance over time.

Steering Wheel



The steering wheel provides an interactive play experience that develops players' motor skills and coordination. Playing with the steering wheel encourages creativity and a sense of control, offering opportunities for imaginative play where players can pretend they are driving various vehicles.

Gear Shift



The gear shift offers a motor activity that simulates the use of machines and devices. Players learn about the transfer of motion and energy while developing their coordination and control abilities.

Abacus

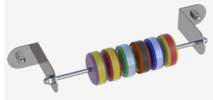

The abacus enhances players' mathematical and cognitive skills. Through play with the abacus, players learn to count, calculate, and solve mathematical problems in a fun and challenging way.

Engravings



Engravings add designs and illustrations to parts of the structure, enriching the play experience with an interesting visual element.

Seat



A seat that provides a small resting station during play where players can sit and rest. Suitable for short breaks or extended stays. Playing on the seat allows players to take a break from physical activity while maintaining connection with the environment and continuing social interactions.

Overlays



Unique and designed visual elements that enhance the overall appearance of the structure. The overlays are durable and add an extra layer of creativity and enriching play experience for players.

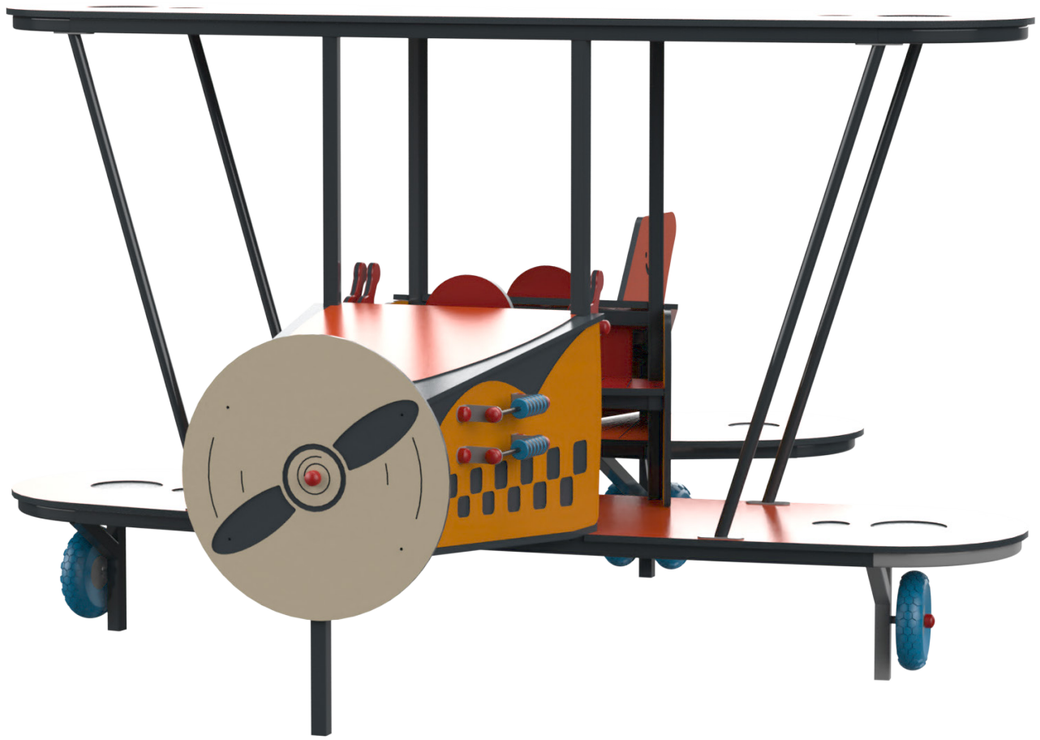



Motor Development

Foot-eye coordination - Improving coordination and balance through various equipment. Hand-eye coordination - Developing coordination and precision in activities requiring fine motor skills.

Cognitive Development

Curiosity - Encouraging exploration and discovery through equipment providing new and unfamiliar experiences. Creativity- Developing creative thinking and imagination in open and interactive play.

Emotional Development

Imagination- Encouraging imagination and creating play worlds. Confidence- Building self-confidence and belief in one's personal abilities. Independence- Developing independence and the ability to make personal decisions.

Social Development

Communication- Developing effective and clear communication skills with playmates Respect for boundaries- Learning the importance of respecting personal and social boundaries. Friendship creation- Creating friendships and strengthening social bonds.

Physical Development

Climbing - Strengthening arm and leg muscles, developing fitness and endurance