TSP-2584C

Hillside Slide C

Topographic hill play system model Hillside Slide C

Recycled HDPE:

Steel:

Polycarbonate:

Crawling

Climbing

Sliding

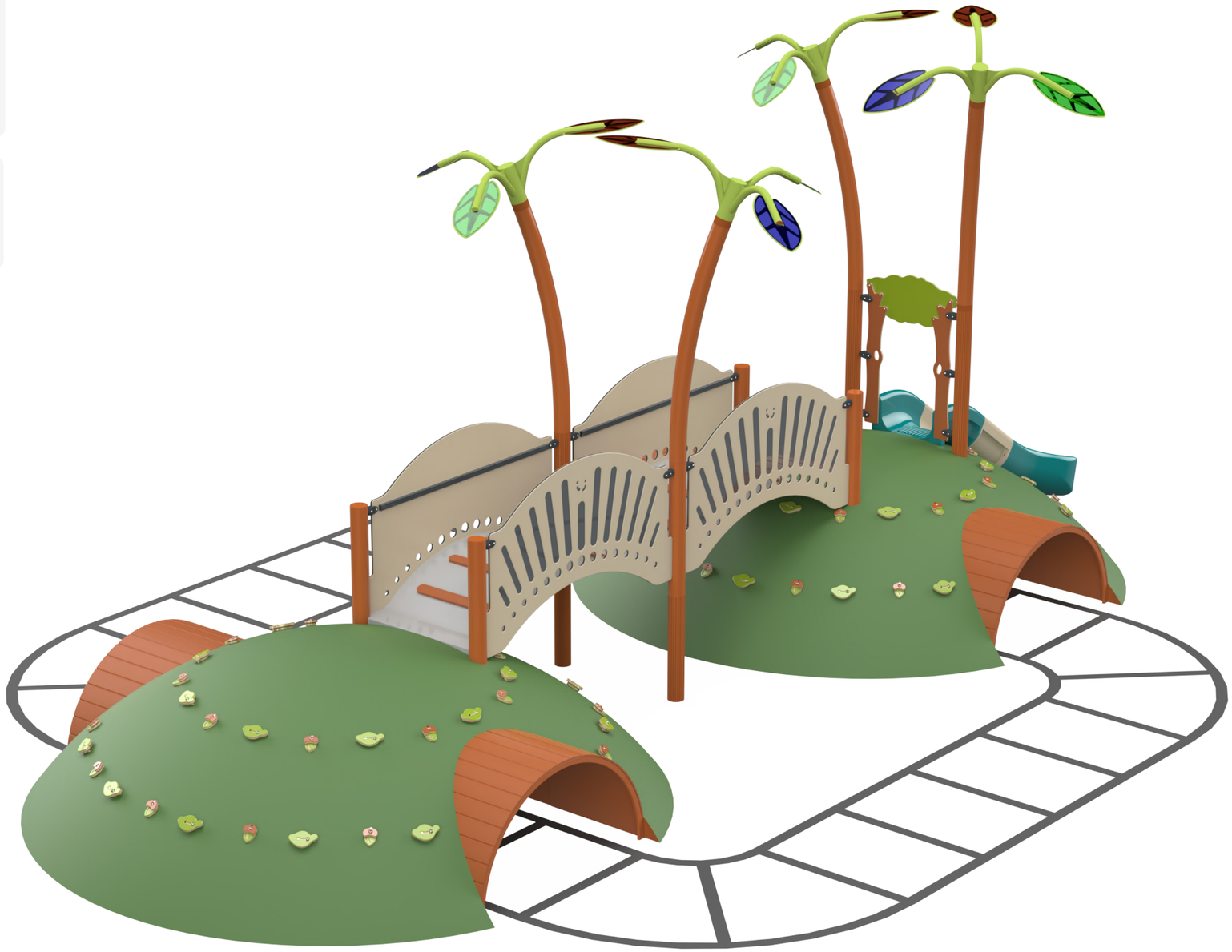

Ages 2-5

Users 25

Dimensions L: 11'-23" W: 11'-2" H: 6'-17" | cm L: 351 W: 350 H: 193

Safety Zone 620"/257" | cm 1574 / 653

Fall Height 3'-10.1" | 120 cm

Accessible

A unique play structure combining rubber hills with slide bridges and decorative treetops. The structure is designed with a natural look and encourages children to climb, slide, and play in an environment simulating a natural landscape.



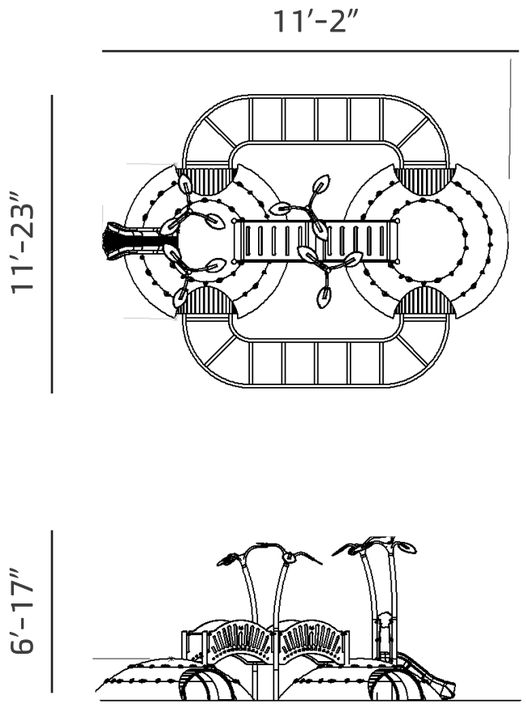



Recycled HDPE

HDPE (High-Density Polyethylene) is a recycled material made from high-density polyethylene, produced from recycled materials that allows for further recycling. It excels in resistance to UV rays and wear and tear, making it particularly suitable for use in outdoor playground equipment. Its touch is smooth and pleasant, and its appearance is maintained over time. The advantages include high resistance to harsh weather conditions and environmental preservation. The material is capable of absorbing high energy, which helps prevent fractures.



Steel

Steel structure that is strong and durable, oven-painted galvanized and coated with lead-free polyester powder for corrosion and rust resistance. The steel meets strict EN 1176 standards, ensuring high quality and safety. The steel is anti-vandalistic, requires minimal maintenance, and is fully recyclable. The high-quality paint ensures weather resistance and maintains a new appearance over time.



Polycarbonate

Colored polycarbonate is a durable, lightweight, and transparent thermoplastic polymer that complies with international standards such as EN 71 and ISO 179. It has a smooth touch, a glossy appearance, and is available in a variety of colors and transparencies. The material is used to create decorative elements in playground equipment, offering high impact resistance, UV protection, and great design flexibility

Rubber Hills



Rubber hills provide a fun and challenging play experience that includes climbing, jumping, and sometimes even crawling. The hills allow children to develop strength, coordination, and balance while playing in a safe and enjoyable environment.

Hand and Foot Holds



Hand and foot holds provide support during play and use of the structure. Players develop their strength and coordination while maintaining stability and security.

Toddler Slide



The toddler slide provides a safe and enjoyable sliding experience for little ones. It develops coordination, movement, balance, and self-confidence for young players.

Designed Panel



The designed panel adds an aesthetic and unique dimension to the playground equipment, enhancing the overall play experience. The panel allows players to feel part of a creative and imaginative world, designed to align with the narrative of the playground. The design ensures easy and safe access to play activities, while maintaining a sense of security and enjoyment.

Open Bridge

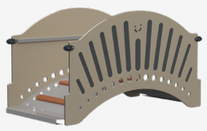

The open bridge allows safe and convenient passage between parts of the structure, developing players' motor skills and balance. The height dimension from the ground adds a sense of excitement and adventure as players practice maintaining stability and confidence while crossing the bridge. Playing on the bridge encourages movement and self-confidence.

Decorations and Accessories



Decorations and accessories adorn the structures and highlight the theme of the playground. They encourage players to use their imagination and creativity during play.

Crawl Tunnel



The crawl tunnel offers a physical challenge that develops players' motor skills, coordination, and balance. Players crawl through the tunnel and enjoy the sense of wonder and excitement as they enter from one side and exit from the other. Playing in the tunnel encourages exploration, daring, and self-confidence while maintaining a safe and enjoyable environment.

Connectors



The connectors in our play structures are designed to securely and safely join parts of the structure. They are made of durable and high-quality materials, ensuring long-term durability without wear.



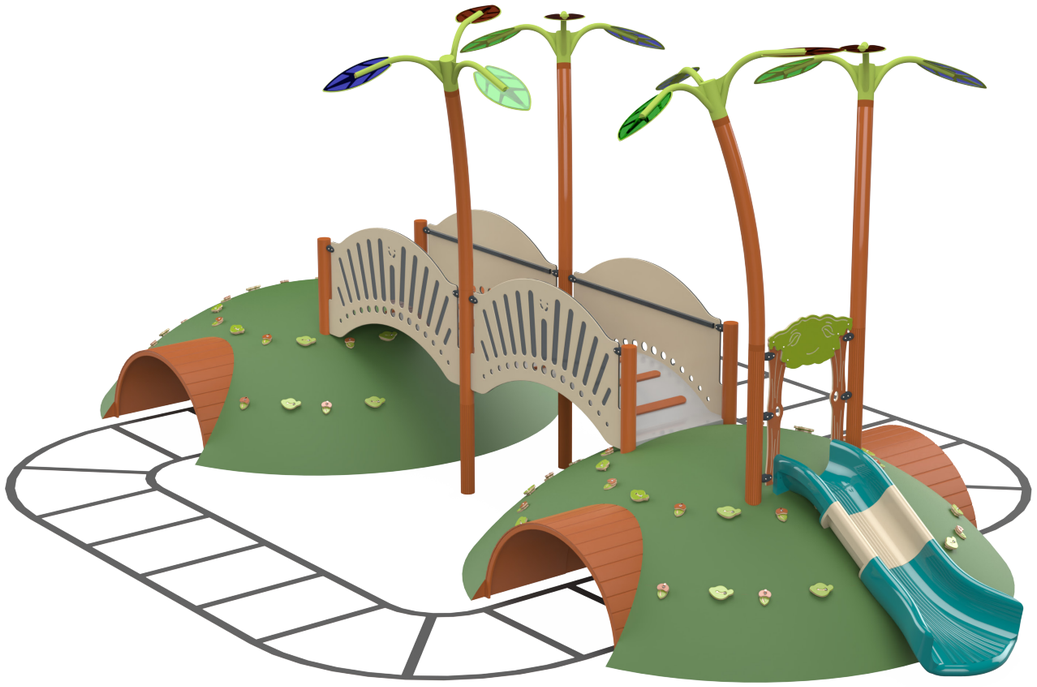

Motor Development

Hand-eye coordination - Developing coordination and precision in activities requiring fine motor skills. Foot-eye coordination - Improving coordination and balance through various equipment.

Cognitive Development

Spatial awareness- Improving the ability to understand and navigate space through mazes and courses..

Emotional Development

Confidence- Building self-confidence and belief in one's personal abilities. Independence- Developing independence and the ability to make personal decisions.

Social Development

Friendship creation- Creating friendships and strengthening social bonds. Friendship creation- Creating friendships and strengthening social bonds.

Physical Development

Climbing - Strengthening arm and leg muscles, developing fitness and endurance Balancing- Improving balance and posture. Sliding - Strengthening leg and arm muscles and improving coordination.