TSP-2586B

Auntie’s House B

Toddler play system model Auntie?s House B

Recycled HDPE:

Steel:

Balancing Climbing Sliding



Ages 2-5 | Users 11 | Dimensions L: 5'-8" W: 12'-11.1" H: 7'-3.2" | cm L: 177 W: 404 H: 227 | Safety Zone 24'-10.6"/17'-11.8" | cm 757 / 546 | Fall Height 2'-10.6" | 90 cm | Accessible

An upgraded version of 'Auntie's House', featuring an additional climbing wall with HDPE climbing holds. Perfect for playing house and similar role-play games, this playset encourages climbing, clambering, crawling and sliding.

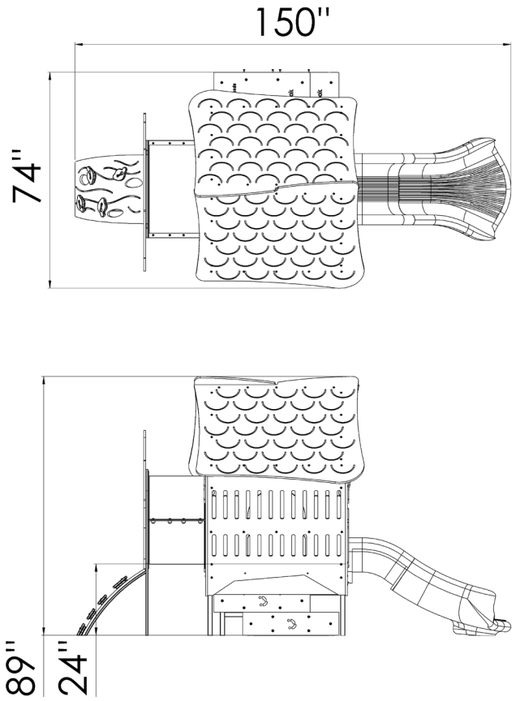

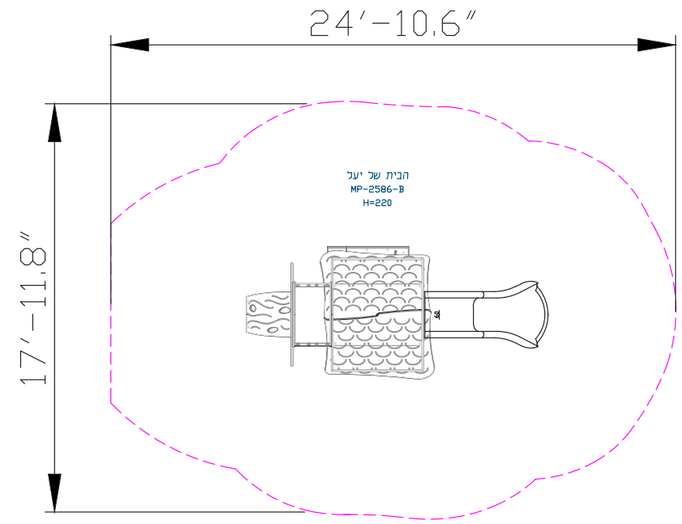





Recycled HDPE

HDPE (High-Density Polyethylene) is a recycled material made from high-density polyethylene, produced from recycled materials that allows for further recycling. It excels in resistance to UV rays and wear and tear, making it particularly suitable for use in outdoor playground equipment. Its touch is smooth and pleasant, and its appearance is maintained over time. The advantages include high resistance to harsh weather conditions and environmental preservation. The material is capable of absorbing high energy, which helps prevent fractures.



Steel

Steel structure that is strong and durable, oven-painted galvanized and coated with lead-free polyester powder for corrosion and rust resistance. The steel meets strict EN 1176 standards, ensuring high quality and safety. The steel is anti-vandalistic, requires minimal maintenance, and is fully recyclable. The high-quality paint ensures weather resistance and maintains a new appearance over time.



Designed Panel

The designed panel adds an aesthetic and unique dimension to the playground equipment, enhancing the overall play experience. The panel allows players to feel part of a creative and imaginative world, designed to align with the narrative of the playground. The design ensures easy and safe access to play activities, while maintaining a sense of security and enjoyment.

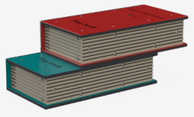

Designed Climbing Element

The designed climbing element combines physical challenge with a unique and inviting design. Players develop physical skills such as strength, coordination, and balance while playing in a creative and designed environment. The unique design encourages players to play and explore, fostering their imagination and creativity.



Toddler Slide

The toddler slide provides a safe and enjoyable sliding experience for little ones. It develops coordination, movement, balance, and self-confidence for young players.



Ventilation Window

A ventilation window provides a sense of openness and ventilates the structure, enhancing the play experience and adding an element of enjoyment and freshness. It also allows for maintaining eye contact between the player and companion, strengthening the sense of security.

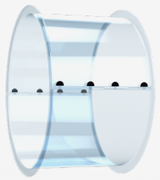

Crawl Tunnel

The Crawl Tunnel is made of ropes in natural hues that mimic tree trunks and forest branches, giving a natural and adventurous look. The bridge is elevated, enhancing the sense of adventure and challenge as players progress along a relatively narrow strip. Playing on the Crawl Tunnel encourages players to maintain balance and stability while moving, providing a fun and exciting experience reminiscent of walking through a wild forest.



Hand and Foot Holds

Hand and foot holds provide support during play and use of the structure. Players develop their strength and coordination while maintaining stability and security.



Designed Roof

The designed roof adds an aesthetic and interesting element to the play structure, providing shade and protection from the sun and rain. In addition to its functional role, the designed roof integrates with the story the play structure tells, enhancing the play experience. The roof design adds a dimension of imagination and creativity, allowing players to experience the structure as a magical and fascinating place, enhancing their enjoyment of the play.



Overlays

Unique and designed visual elements that enhance the overall appearance of the structure. The overlays are durable and add an extra layer of creativity and enriching play experience for players.



Motor Development

Foot-eye coordination - Improving coordination and balance through various equipment. Hand-eye coordination - Developing coordination and precision in activities requiring fine motor skills.

Cognitive Development

Spatial awareness- Improving the ability to understand and navigate space through mazes and courses.. Curiosity - Encouraging exploration and discovery through equipment providing new and unfamiliar experiences.

Emotional Development

Imagination- Encouraging imagination and creating play worlds. Independence- Developing independence and the ability to make personal decisions. Empathy- Developing the ability to understand and accept differences and complexities.

Social Development

Communication- Developing effective and clear communication skills with playmates Friendship creation- Creating friendships and strengthening social bonds. Communication- Developing effective and clear communication skills with playmates Friendship creation- Creating friendships and strengthening social bonds.

Physical Development

Climbing - Strengthening arm and leg muscles, developing fitness and endurance Crawling - Strengthening abdominal and back muscles, improving coordination and flexibility. Sliding - Strengthening leg and arm muscles and improving coordination.