TSP-2591

Dino the Dinosaur

Toddler play system model Dino the Dinosaur

Recycled HDPE:

Steel:

Balancing Crawling Climbing Sliding

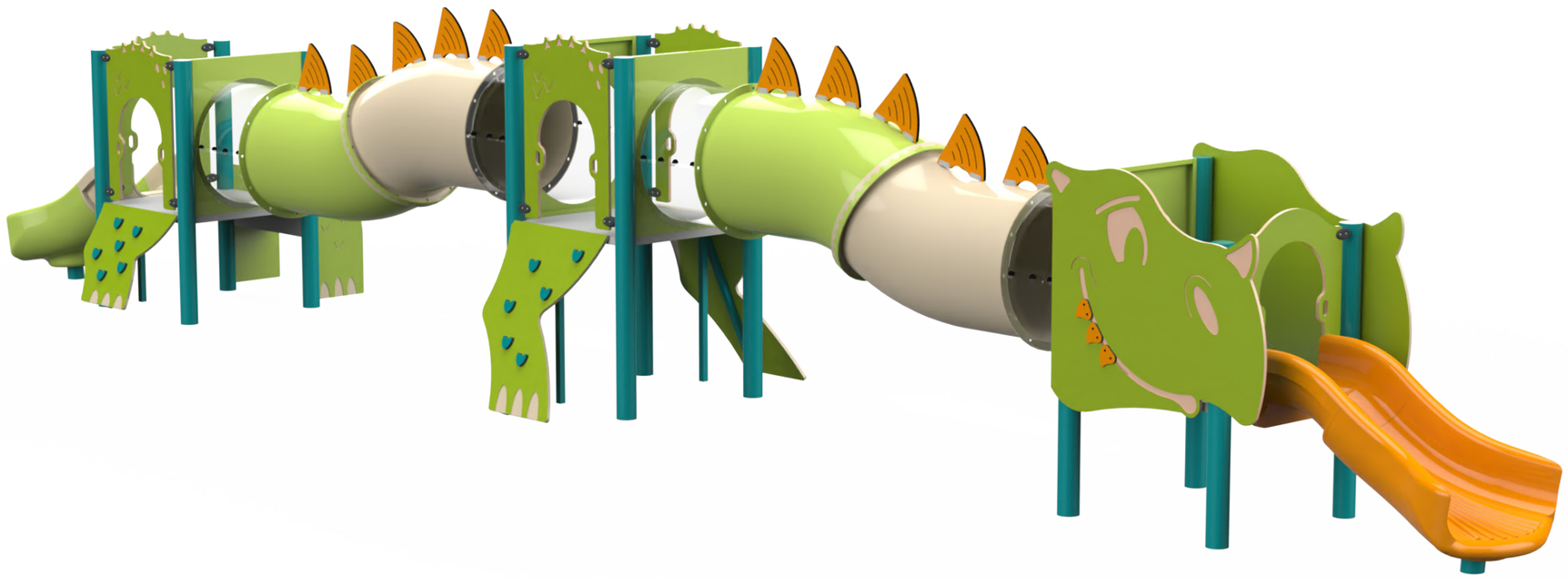

Ages 2-5 | Users 34 | Dimensions L: 40'-4.6" W: 6'-3.6" H: 6'-7.9" | cm L: 1262 W: 197 H: 208 | Safety Zone 59'-3.1"/20'-11.4" | cm 1806 / 638 | Fall Height 3'-6.2" | 110 cm | Accessible

The Dino the Dinosaur is a crawling structure with a playful appearance made of a curved plastic barrel resembling a sweet dinosaur. Entry is only by climbing using hand and foot treads through the dinosaur's tongue, and exiting from the other side after a short crawl. The structure develops curiosity and encourages independence and exploration, helps in a controlled manner in dealing with fears, and imparts self-confidence to young children.

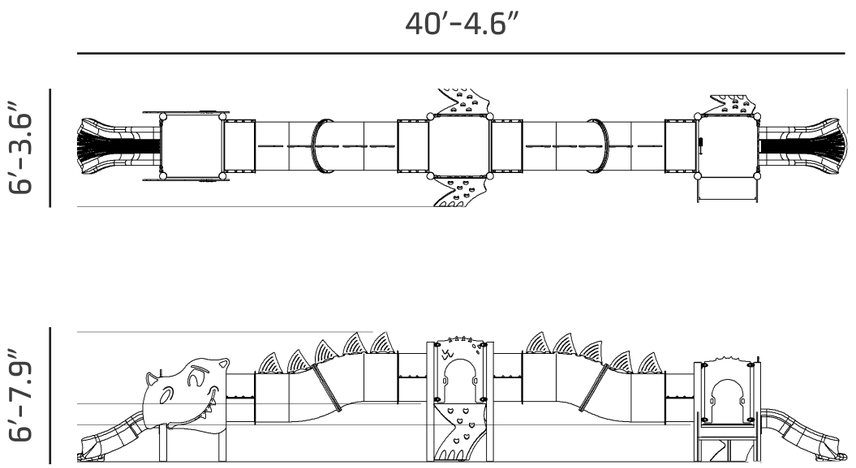

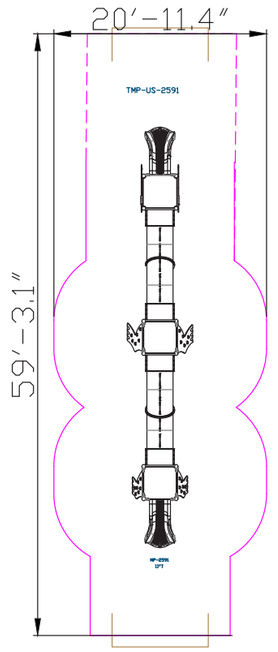





Recycled HDPE

HDPE (High-Density Polyethylene) is a recycled material made from high-density polyethylene, produced from recycled materials that allows for further recycling. It excels in resistance to UV rays and wear and tear, making it particularly suitable for use in outdoor playground equipment. Its touch is smooth and pleasant, and its appearance is maintained over time. The advantages include high resistance to harsh weather conditions and environmental preservation. The material is capable of absorbing high energy, which helps prevent fractures.



Steel

Steel structure that is strong and durable, oven-painted galvanized and coated with lead-free polyester powder for corrosion and rust resistance. The steel meets strict EN 1176 standards, ensuring high quality and safety. The steel is anti-vandalistic, requires minimal maintenance, and is fully recyclable. The high-quality paint ensures weather resistance and maintains a new appearance over time.

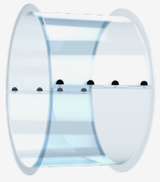

Crawl Tunnel

The Crawl Tunnel is made of ropes in natural hues that mimic tree trunks and forest branches, giving a natural and adventurous look. The bridge is elevated, enhancing the sense of adventure and challenge as players progress along a relatively narrow strip. Playing on the Crawl Tunnel encourages players to maintain balance and stability while moving, providing a fun and exciting experience reminiscent of walking through a wild forest.



Toddler Slide

The toddler slide provides a safe and enjoyable sliding experience for little ones. It develops coordination, movement, balance, and self-confidence for young players.



Climbing Wall

The climbing wall offers a physical challenge that develops the muscle strength, coordination and weight of the players. Climbing the wall improves their problem solving. This is a place where players overcome fears and develop courage and self-confidence.



Crawl Tunnel

The Crawl Tunnel is made of ropes in natural hues that mimic tree trunks and forest branches, giving a natural and adventurous look. The bridge is elevated, enhancing the sense of adventure and challenge as players progress along a relatively narrow strip. Playing on the Crawl Tunnel encourages players to maintain balance and stability while moving, providing a fun and exciting experience reminiscent of walking through a wild forest.

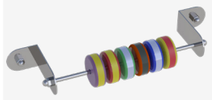

Abacus

The abacus enhances players' mathematical and cognitive skills. Through play with the abacus, players learn to count, calculate, and solve mathematical problems in a fun and challenging way.



Climbing Element

The climbing element offers a physical challenge that develops muscle strength, coordination, and balance. Climbing on the element encourages children to overcome fears and build self-confidence and perseverance. Additionally, the element helps develop problem-solving skills as children look for efficient and safe ways to climb.



Designed Panel

The designed panel adds an aesthetic and unique dimension to the playground equipment, enhancing the overall play experience. The panel allows players to feel part of a creative and imaginative world, designed to align with the narrative of the playground. The design ensures easy and safe access to play activities, while maintaining a sense of security and enjoyment.



Overlays

Unique and designed visual elements that enhance the overall appearance of the structure. The overlays are durable and add an extra layer of creativity and enriching play experience for players.

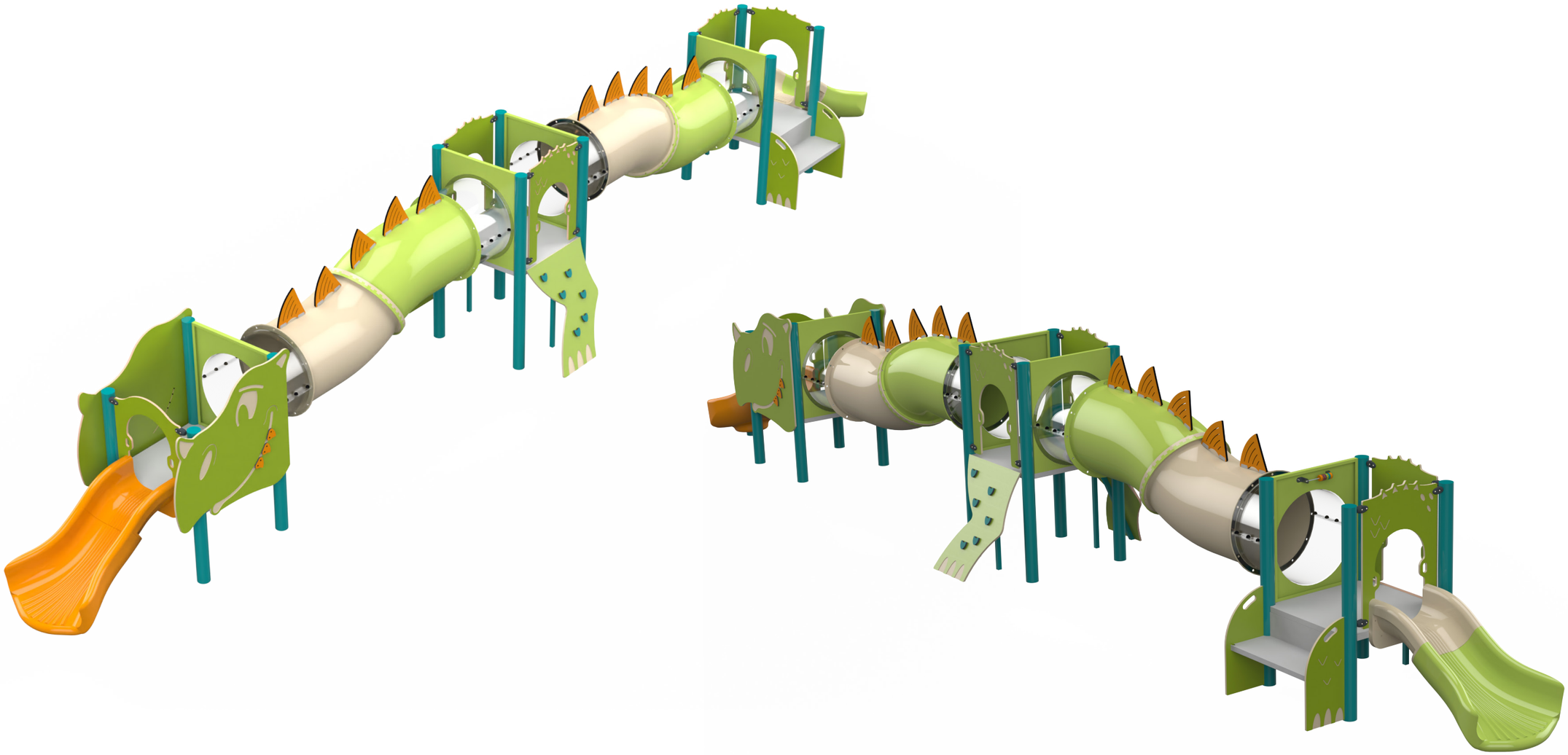

Motor Development

Hand-eye coordination - Developing coordination and precision in activities requiring fine motor skills. Foot-eye coordination - Improving coordination and balance through various equipment.

Cognitive Development

Spatial awareness- Improving the ability to understand and navigate space through mazes and courses.. Curiosity - Encouraging exploration and discovery through equipment providing new and unfamiliar experiences. Creativity- Developing creative thinking and imagination in .open and interactive play

Emotional Development

Imagination- Encouraging imagination and creating play worlds. Independence- Developing independence and the ability to make personal decisions. Empathy- Developing the ability to understand and accept differences and .complexities

Physical Development

Climbing - Strengthening arm and leg muscles, developing fitness and endurance Crawling - Strengthening abdominal and back muscles, improving coordination and flexibility. Sliding - Strengthening leg and arm .muscles and improving coordination

Social Development

Communication- Developing effective and clear communication skills with playmates Respect for boundaries- Learning the importance of respecting personal and social boundaries. Friendship creation- Creating friendships and strengthening social bonds.