TSP-5144

Joy Robinia

Robinia wood toddler play system model Joy Robinia

Balancing

Climbing

Sliding



Ages 2-5

Users 7

Dimensions L: 7'-6.2" W: 17'-4.5" H: 5'-4.1" | cm L: 235 W: 543 H: 167

Safety Zone 29'-7.7"/22'-6.5" | cm 903/687

Fall Height 1'-11" | 60 cm

Accessible

Joy is a play structure made of natural Robinia Wood. Suitable for toddlers and young children, The structure includes a suspended wooden bridge, a small climbing wall, and an open slide, combining elements of climbing, balance, and sliding.

The design celebrates the use of natural wood, providing a rustic and environmentally friendly appearance, along with stability and safety. The equipment encourages the development of motor skills and balance, while providing a pleasant, natural environment for play.

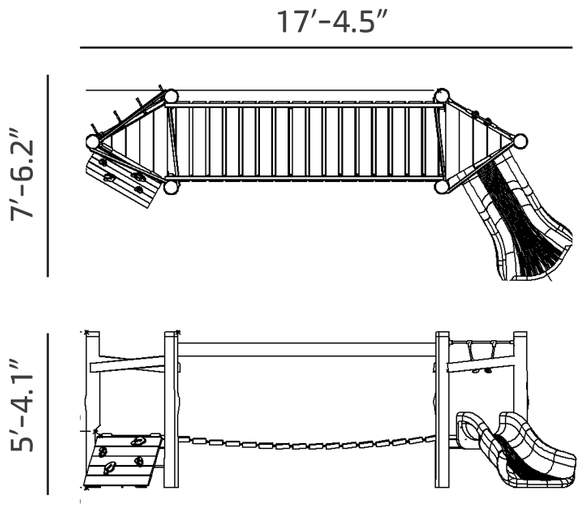

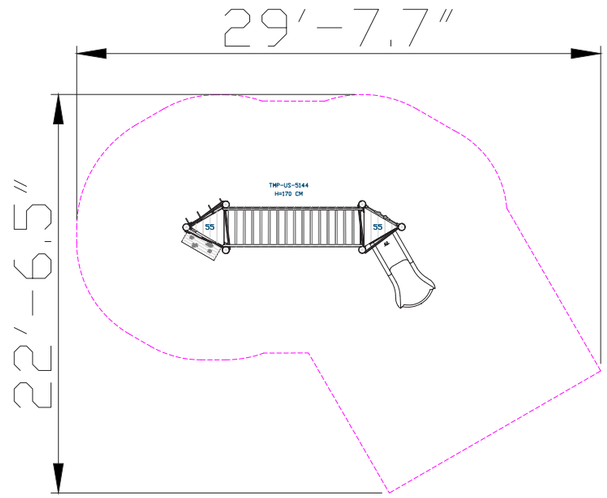





Robinia Wood

European Robinia wood is natural, robust, and durable, particularly suitable for use in outdoor playground equipment. It complies with stringent standards such as FSC, has a smooth and pleasant touch, a natural and authentic appearance, and integrates well with natural surroundings. Its high durability, long lifespan, and being a natural and safe material make it a popular choice for use in playground equipment.



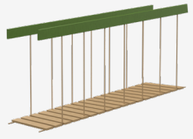

Open Bridge

The open bridge allows safe and convenient passage between parts of the structure, developing players' motor skills and balance. The height dimension from the ground adds a sense of excitement and adventure as players practice maintaining stability and confidence while crossing the bridge. Playing on the bridge encourages movement and self-confidence.



Hand and Foot Holds

Hand and foot holds provide support during play and use of the structure. Players develop their strength and coordination while maintaining stability and security.



Climbing Wall

The climbing wall offers a physical challenge that develops the muscle strength, coordination and weight of the players. Climbing the wall improves their problem solving. This is a place where players overcome fears and develop courage and self-confidence.



Tread Surface

The tread surface provides support and safety during play on the structure. The surface is designed to prevent slipping and improve players' stability and security.



Toddler Slide

The toddler slide provides a safe and enjoyable sliding experience for little ones. It develops coordination, movement, balance, and self-confidence for young players.



Rope Ladder

The rope ladder provides vertical access to the play structure and encourages players to develop physical skills such as strength, coordination, and balance. Climbing the rope ladder strengthens hand and leg muscles and develops a sense of balance. The ladder encourages players to face challenges and develop flexibility and agility.



Motor Developmentarm

Hand-eye coordination - Developing coordination and precision in activities requiring fine motor skills. Foot-eye coordination - Improving coordination and balance through various equipment.



Cognitive Development

Curiosity - Encouraging exploration and discovery through equipment providing new and unfamiliar experiences. Creativity- Developing creative thinking and imagination in open and interactive play.



Emotional Development

Courage- Facing fears and new challenges. Confidence- Building self-confidence and belief in one's personal abilities. Independence- Developing independence and the ability to make personal decisions.



Physical Development

Climbing - Strengthening arm and leg muscles, developing fitness and endurance. Balancing- Improving balance and posture. Sliding - Strengthening leg and arm muscles and improving coordination.