TSP-5167L

Thomas L

Toddler train model Thomas Locomotive left curve

Recycled HDPE:

Steel:

Climbing

Crawling



Ages 2-5

Users 10

Dimensions L: 2 8'-6.9" 68 W: 15'-8.2" H: 5'-11.4" | cm L:268 W: 490 H: 188

Safety Zone 21'-4.9"/28'-8.9" | cm 650/ 856

Fall Height 1'-11" | 60 cm

Accessible

Thomas L is a play structure for young children designed in the style of a classic children's train, inviting children on an exciting imaginative journey. The structure includes an open area for sitting and playing, and it's built so that children can climb, crawl, and pass through it.

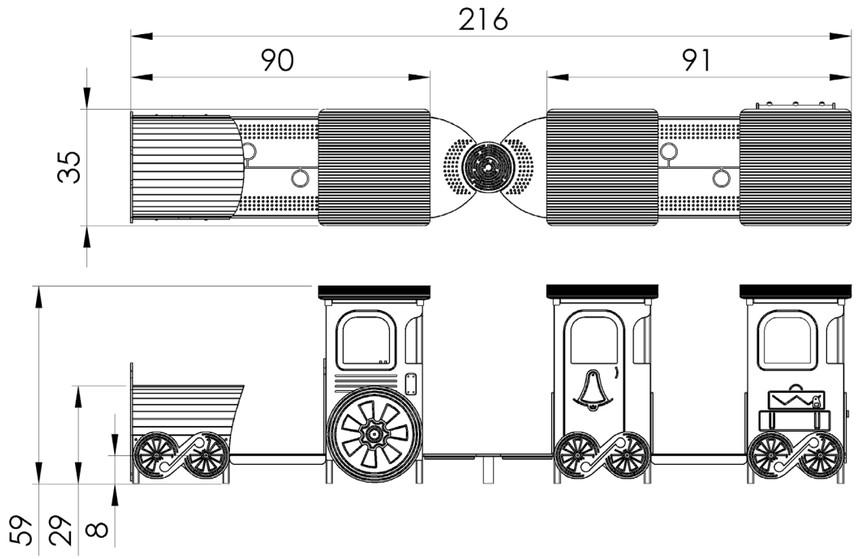

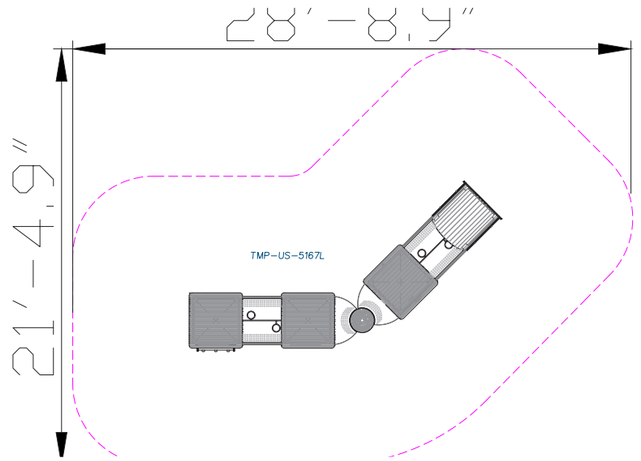





Recycled HDPE

HDPE (High-Density Polyethylene) is a recycled material made from high-density polyethylene, produced from recycled materials that allows for further recycling. It excels in resistance to UV rays and wear and tear, making it particularly suitable for use in outdoor playground equipment. Its touch is smooth and pleasant, and its appearance is maintained over time. The advantages include high resistance to harsh weather conditions and environmental preservation. The material is capable of absorbing high energy, which helps prevent fractures.



Steel

Steel structure that is strong and durable, oven-painted galvanized and coated with lead-free polyester powder for corrosion and rust resistance. The steel meets strict EN 1176 standards, ensuring high quality and safety. The steel is anti-vandalistic, requires minimal maintenance, and is fully recyclable. The high-quality paint ensures weather resistance and maintains a new appearance over time.

Gear Shift

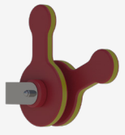

The gear shift offers a motor activity that simulates the use of machines and devices. Players learn about the transfer of motion and energy while developing their coordination and control abilities.

Steering Wheel



The steering wheel provides an interactive play experience that develops players' motor skills and coordination. Playing with the steering wheel encourages creativity and a sense of control, offering opportunities for imaginative play where players can pretend they are driving various vehicles.

Play Panel

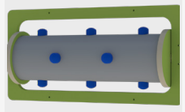

The play panel provides a variety of interactive play options that develop players' motor and cognitive skills. Each panel offers a unique activity that stimulates thinking and encourages players to learn and discover more.

Seat



A seat that provides a small resting station during play where players can sit and rest. Suitable for short breaks or extended stays. Playing on the seat allows players to take a break from physical activity while maintaining connection with the environment and continuing social interactions.

Moving Game



The moving game provides dynamic activity that develops players' coordination, strength, and motor skills.

Abacus

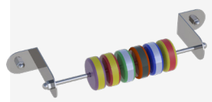

The abacus enhances players' mathematical and cognitive skills. Through play with the abacus, players learn to count, calculate, and solve mathematical problems in a fun and challenging way.

Ventilation Window



A ventilation window provides a sense of openness and ventilates the structure, enhancing the play experience and adding an element of enjoyment and freshness. It also allows for maintaining eye contact between the player and companion, strengthening the sense of security.



Engravings add designs and illustrations to parts of the structure, enriching the play experience with an interesting visual element.



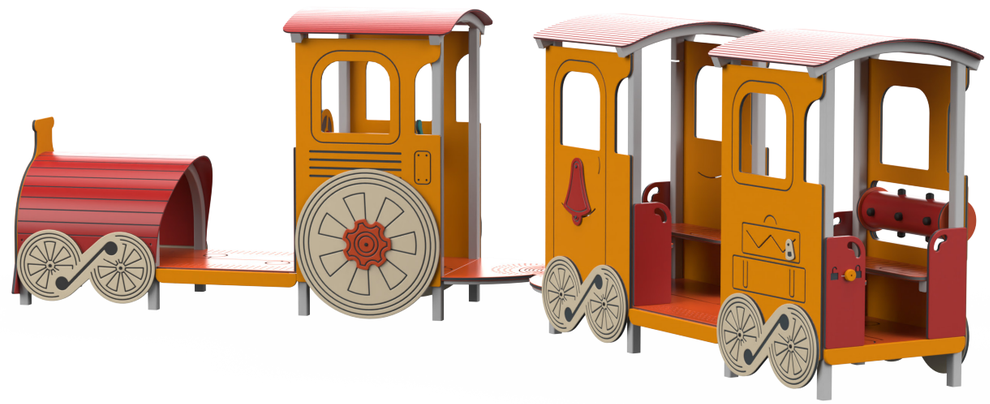

Motor Development

Hand-eye coordination - Developing coordination and precision in activities requiring fine motor skills. Foot-eye coordination - Improving coordination and balance through various equipment.

Cognitive Development

Spatial awareness- Improving the ability to understand and navigate space through mazes and courses.. Curiosity - Encouraging exploration and discovery through equipment providing new and unfamiliar experiences. Creativity- Developing creative thinking and imagination in open and interactive play.

Emotional Development

Confidence- Building self-confidence and belief in one's personal abilities. Independence- Developing independence and the ability to make personal decisions.

Social Development

Cooperation- Encouraging joint work and reaching shared goals. Communication- Developing effective and clear communication skills with playmates. Conflict resolution- Learning to resolve disputes and manage conflicts positively.

Physical Development

Climbing - Strengthening arm and leg muscles, developing fitness and endurance Balancing- Improving balance and posture. Sliding - Strengthening leg and arm muscles and improving coordination.

For illustration purposes only ADA Thomas L TSP-5167L 4/4 TM