TSP-9019

Noah's Ark

Toddler play system model Noah's Ark

Steel:

Recycled HDPE:

Crawling

Climbing

Sliding



Ages 2-5

Users 18

Dimensions L: 5'-6" W: 14'-6.3" H: 5'-3.4" | cm L: 172 W: 454 H: 165

Safety Zone 22'-0.9"/26'-8.1" | cm 6721 / 813

Fall Height 3'-6.2" | 110 cm

Accessible

The Noah's Ark is a designed toddler structure for adventure games, rich in details and imagination-stimulating. Made of galvanized and painted steel. The structure is designed inspired by the biblical Noah's Ark and adorned with sweet animals. It allows exploration and play in a safe environment with designed crawling tunnels, dynamic play levels, and a double toddler slide for shared experiences. The steering wheel adds a sense of navigation and control, encouraging the development of leadership, motor, and perceptual skills.

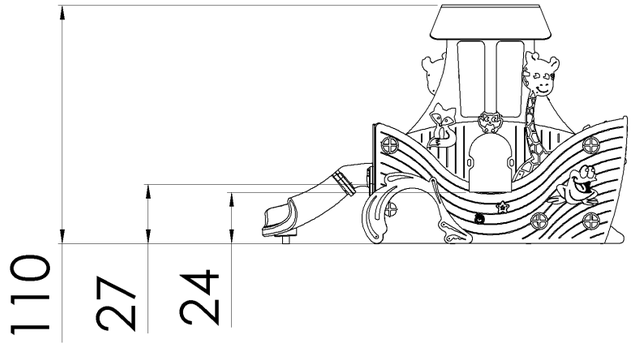

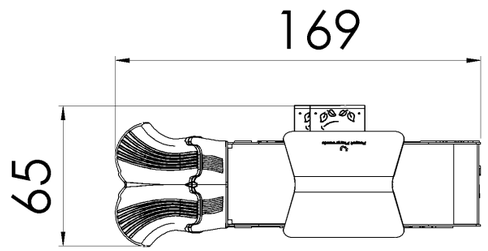

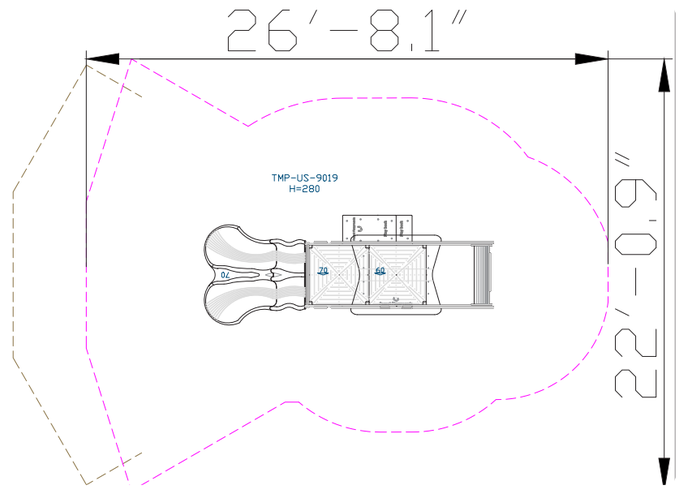





Recycled HDPE

HDPE (High-Density Polyethylene) is a recycled material made from high-density polyethylene, produced from recycled materials that allows for further recycling. It excels in resistance to UV rays and wear and tear, making it particularly suitable for use in outdoor playground equipment. Its touch is smooth and pleasant, and its appearance is maintained over time. The advantages include high resistance to harsh weather conditions and environmental preservation. The material is capable of absorbing high energy, which helps prevent fractures.



Steel

Steel structure that is strong and durable, oven-painted galvanized and coated with lead-free polyester powder for corrosion and rust resistance. The steel meets strict EN 1176 standards, ensuring high quality and safety. The steel is anti-vandalistic, requires minimal maintenance, and is fully recyclable. The high-quality paint ensures weather resistance and maintains a new appearance over time.



Ventilation Window

A ventilation window provides a sense of openness and ventilates the structure, enhancing the play experience and adding an element of enjoyment and freshness. It also allows for maintaining eye contact between the player and companion, strengthening the sense of security.



Double Slide

The double slide allows two players to slide simultaneously, encouraging friendly competition and the development of social skills. Shared sliding fosters cooperation and shared fun.



Overlays

Unique and designed visual elements that enhance the overall appearance of the structure. The overlays are durable and add an extra layer of creativity and enriching play experience for players.

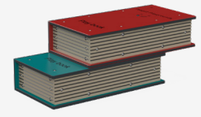

Designed Climbing Element

The designed climbing element combines physical challenge with a unique and inviting design. Players develop physical skills such as strength, coordination, and balance while playing in a creative and designed environment. The unique design encourages players to play and explore, fostering their imagination and creativity.



Steering Wheel

The steering wheel provides an interactive play experience that develops players' motor skills and coordination. Playing with the steering wheel encourages creativity and a sense of control, offering opportunities for imaginative play where players can pretend they are driving various vehicles.



Crawl Tunnel

The Crawl Tunnel is made of ropes in natural hues that mimic tree trunks and forest branches, giving a natural and adventurous look. The bridge is elevated, enhancing the sense of adventure and challenge as players progress along a relatively narrow strip. Playing on the Crawl Tunnel encourages players to maintain balance and stability while moving, providing a fun and exciting experience reminiscent of walking through a wild forest.



Hand and Foot Holds

Hand and foot holds provide support during play and use of the structure. Players develop their strength and coordination while maintaining stability and security.



Moving Game

The moving game provides dynamic activity that develops players' coordination, strength, and motor skills.





Motor Development

Fine motor skills- Developing precise control in small movements through activities requiring fine manual skills.

Cognitive Development

Spatial awareness- Improving the ability to understand and navigate space through mazes and courses.. Curiosity - Encouraging exploration and discovery through equipment providing new and unfamiliar experiences. Creativity- Developing creative thinking and imagination in open and interactive play.

Emotional Development

Imagination- Encouraging imagination and creating play worlds. Courage- Facing fears and new challenges. Confidence- Building self-confidence and belief in one's personal abilities. Independence- Developing independence and the ability to make personal decisions. Resilience- Coping with failure and trying again.

Physical Development

Climbing - Strengthening arm and leg muscles, developing fitness and endurance. Sliding - Strengthening leg and arm muscles and improving coordination.

Social Development

Communication- Developing effective and clear communication skills with playmates Respect for boundaries- Learning the importance of respecting personal and social boundaries. Friendship creation- Creating friendships and strengthening social bonds.