TSP-10090

Fresno

Play system model Fresno

Steel:

Balancing

Climbing

Sliding



Ages 2-5

Users 8

Dimensions L: 5'-9.5" W: 8'-8.1" H: 12'-5.8" | cm L: 271 W: 181 H: 390

Safety Zone 28'-2.2"/24'-8.6" | cm 859 / 752

Fall Height 3'-6.2" | 110 cm

The Fresno is a compact play structure featuring a single-level triangular tower. The structure is equipped with an open slide, a play panel, and a climbing element.

The lightweight and simple design is especially suited for toddlers and young children, allowing them to develop basic motor skills in a safe and pleasant environment. This is an ideal system for kindergartens and daycare centers, offering a fun play experience.

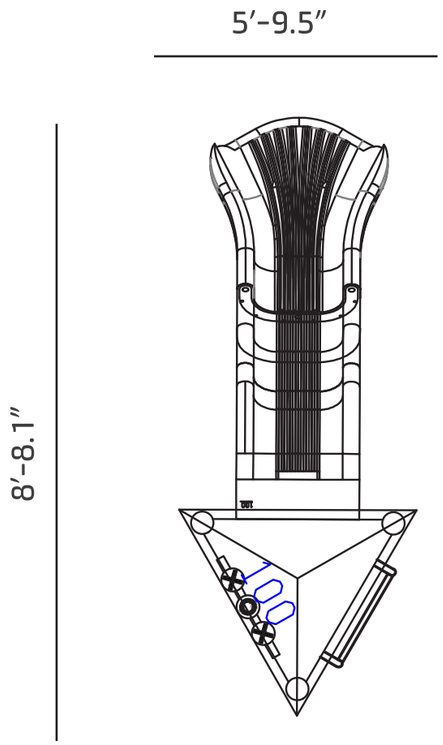

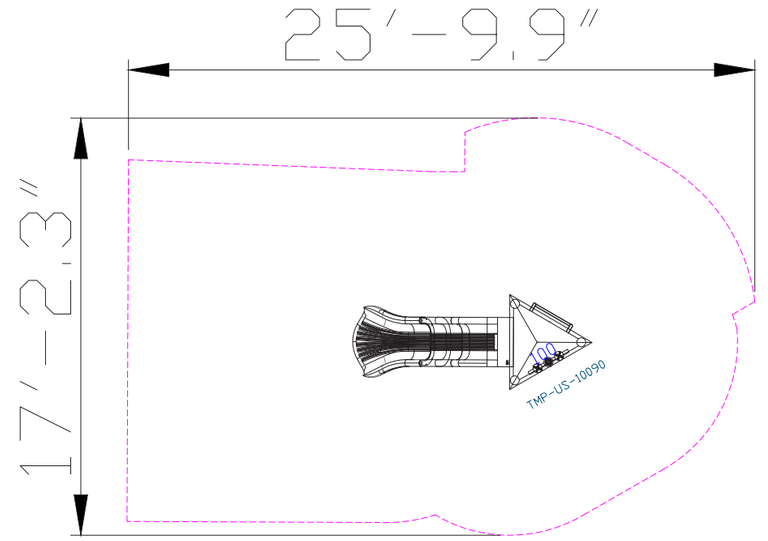



Physical Development

Climbing - Strengthening arm and leg muscles, developing fitness and endurance Sliding - Strengthening leg and arm muscles and improving .coordination

Physical Development

Climbing - Strengthening arm and leg muscles, developing fitness and endurance. Sliding - Strengthening leg and arm muscles and improving .coordination

Emotional Development

Courage- Facing fears and new challenges. Confidence- Building self-confidence and belief in one's personal abilities. Independence- Developing independence and the ability to make personal decisions. Resilience- Coping with failure and trying again.



Play Panel

The play panel provides a variety of interactive play options that develop players' motor and cognitive skills. Each panel offers a unique activity that stimulates thinking and encourages players to learn and discover more.



Toddler Slide

The toddler slide provides a safe and enjoyable sliding experience for little ones. It develops coordination, movement, balance, and self-confidence for young players.



Ladder

The ladder provides vertical access to the play structure and encourages players to develop physical skills such as strength, coordination, and balance. Climbing the ladder promotes courage and independence as players face heights and new challenges. The ladder strengthens hand and arm muscles and encourages proper body use.

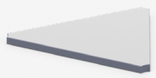

Tread Surface

The tread surface provides support and safety during play on the structure. The surface is designed to prevent slipping and improve players' stability and security.



Roof

The roof provides shade and protection from the sun and rain, allowing players to enjoy play in comfortable conditions. In addition to its functional role, the roof is designed to enhance the look of the structure and align with the story told by the design of the play structure. The roof design contributes to creating an engaging and unique play environment that stimulates imagination and enriches the players' play experience.



Steel

Steel structure that is strong and durable, oven-painted galvanized and coated with lead-free polyester powder for corrosion and rust resistance. The steel meets strict EN 1176 standards, ensuring high quality and safety. The steel is anti-vandalistic, requires minimal maintenance, and is fully recyclable. The high-quality paint ensures weather resistance and maintains a new appearance over time.