# TSP-10210

## Fort Worth

The Fort Worth is a play system composed of two towers connected by an intriguing spiral crawling tunnel. The system includes a wide open slide and comfortable stairs, suitable for toddlers and young children.

Steel:

Balancing Crawling Climbing Hanging Sliding



Ages 2-5 | Users 21 | Dimensions L: 14'-1.7" W: 13'-1.8" H:11'-6.2" | cm L: 442 W: 411 H: 360 | Safety Zone 27'-0.1"/25'-4.8" | cm 823 / 772 | Fall Height 3'-6.2" | 110 cm | Accessible



**Physical Development**

Climbing - Strengthening arm and leg muscles, developing fitness and endurance. Sliding - Strengthening leg and arm muscles and improving .coordination



**Physical Development**

Climbing - Strengthening arm and leg muscles, developing fitness and endurance Crawling - Strengthening abdominal and back muscles, improving coordination and flexibility. Sliding - Strengthening leg and arm .muscles and improving coordination



**Emotional Development**

Courage- Facing fears and new challenges. Confidence- Building self-confidence and belief in one's personal abilities. Independence- Developing independence and the ability to make personal decisions. Resilience- Coping with failure and trying again.

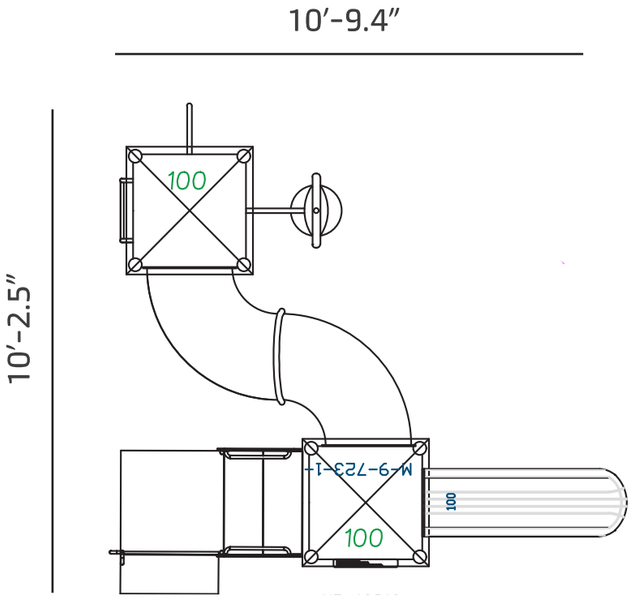




## Steel

Steel structure that is strong and durable, oven-painted galvanized and coated with lead-free polyester powder for corrosion and rust resistance. The steel meets strict EN 1176 standards, ensuring high quality and safety. The steel is anti-vandalistic, requires minimal maintenance, and is fully recyclable. The high-quality paint ensures weather resistance and maintains a new appearance over time.

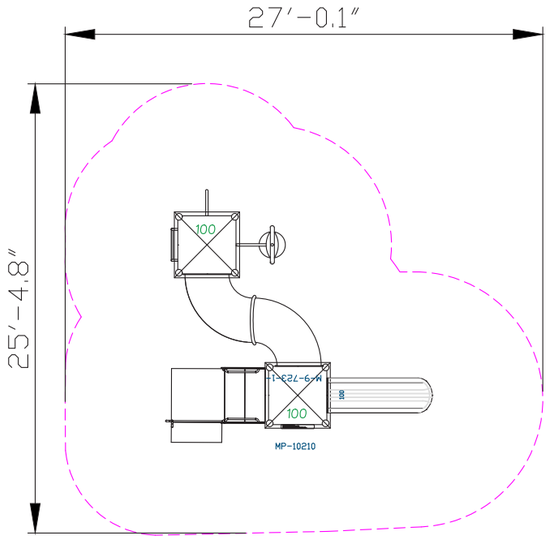






## Sliding Pole

The sliding pole allows for a quick and safe descent from the play structure, providing a fun and thrilling play experience. Young players can feel like firefighters in action. Using the pole strengthens hand and upper body muscles. Players learn to control the speed and direction of their descent, contributing to the development of control skills and self-confidence.



## Toddler Slide

The toddler slide provides a safe and enjoyable sliding experience for little ones. It develops coordination, movement, balance, and self-confidence for young players.



## Crawl Tunnel

The Crawl Tunnel is made of ropes in natural hues that mimic tree trunks and forest branches, giving a natural and adventurous look. The bridge is elevated, enhancing the sense of adventure and challenge as players progress along a relatively narrow strip. Playing on the Crawl Tunnel encourages players to maintain balance and stability while moving, providing a fun and exciting experience reminiscent of walking through a wild forest.



## Climbing Element

The climbing element offers a physical challenge that develops muscle strength, coordination, and balance. Climbing on the element encourages children to overcome fears and build self-confidence and perseverance. Additionally, the element helps develop problem-solving skills as children look for efficient and safe ways to climb.



## Roof

The roof provides shade and protection from the sun and rain, allowing players to enjoy play in comfortable conditions. In addition to its functional role, the roof is designed to enhance the look of the structure and align with the story told by the design of the play structure. The roof design contributes to creating an engaging and unique play environment that stimulates imagination and enriches the players' play experience.



## Ladder

The ladder provides vertical access to the play structure and encourages players to develop physical skills such as strength, coordination, and balance. Climbing the ladder promotes courage and independence as players face heights and new challenges. The ladder strengthens hand and arm muscles and encourages proper body use.



## Play Panel

The play panel provides a variety of interactive play options that develop players' motor and cognitive skills. Each panel offers a unique activity that stimulates thinking and encourages players to learn and discover more.



## Accessible Stairs

The high-durability stairs provide easy and safe access to the play structure, with a non-slip surface to prevent falls. Climbing and descending the stairs help players develop physical skills such as strength, coordination, and balance. The stairs also encourage independence and self-confidence as players learn to navigate heights and new tasks. Suitable for transfer accessibility to ensure convenient and safe access for players with disabilities, including smooth transitions from a wheelchair to the play structure and back.