TSP-10430

Madison

Play system model Madison

Recycled HDPE:

Steel:

Rope Cables:

Balancing

Sliding

Climbing

Jumping

Crawling

Hanging



Ages 5-12

Users 66

Dimensions L: 28'-11.9" W: 40'-1.5" H:24" | cm L: 906 W: 1254 H: 750

Safety Zone 55'/39'-7.6" | cm 1676.4 / 1206.5

Fall Height 9'-28" | 290 cm

Accessible

The Madison is an inclusive play system with accessible stairs and a toddler slide, tube slides, ladders and elements for climbing and hand walking, crawling tunnels, bridges, and many more games and challenges.

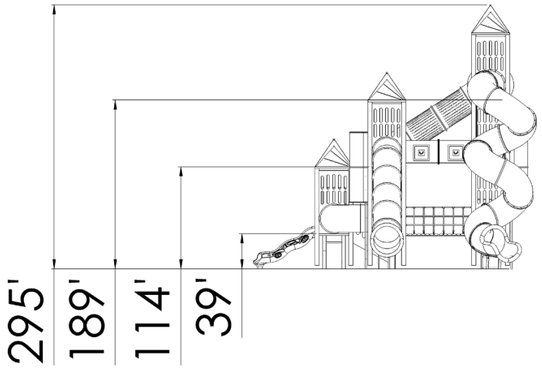

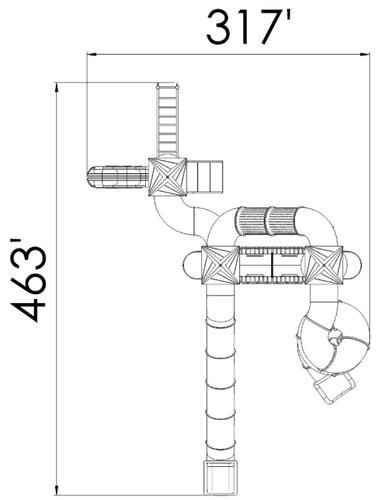

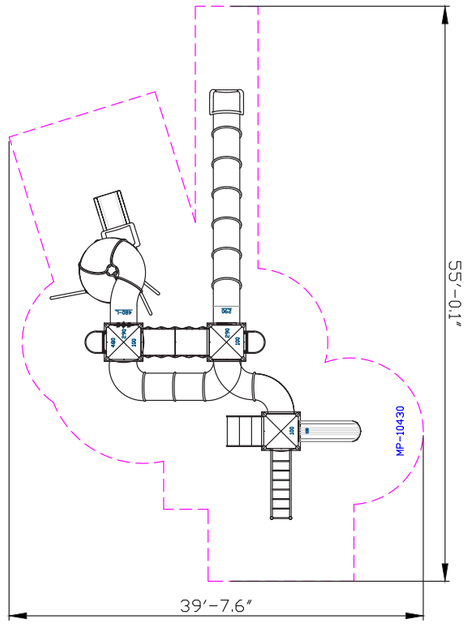





Steel

Steel structure that is strong and durable, oven-painted galvanized and coated with lead-free polyester powder for corrosion and rust resistance. The steel meets strict EN 1176 standards, ensuring high quality and safety. The steel is anti-vandalistic, requires minimal maintenance, and is fully recyclable. The high-quality paint ensures weather resistance and maintains a new appearance over time.



Recycled HDPE

HDPE (High-Density Polyethylene) is a recycled material made from high-density polyethylene, produced from recycled materials that allows for further recycling. It excels in resistance to UV rays and wear and tear, making it particularly suitable for use in outdoor playground equipment. Its touch is smooth and pleasant, and its appearance is maintained over time. The advantages include high resistance to harsh weather conditions and environmental preservation. The material is capable of absorbing high energy, which helps prevent fractures.



Rope Cables

Rope Cables are made of synthetic polypropylene (PP) fibers combined with a galvanized steel core for improved strength and durability. They meet strict standards, such as ASTM A240 and EN 10088, ensuring durability and safety for use in playground equipment. . The cables offer a soft and pleasant touch that does not harm the hands during use and are available in various diameters and colors, allowing for creative and aesthetic design.for creative and aesthetic design.

Straight Bridge



The straight bridge allows safe and convenient passage between parts of the structure, developing players' motor skills and balance. The height effect from the ground adds a sense of adventure and challenge as players learn to maintain stability and confidence during the crossing. Playing on the bridge encourages movement and self-confidence.

Crawl Tunnel



The crawl tunnel offers a physical challenge that develops players' motor skills, coordination, and balance. Players crawl through the tunnel and enjoy the sense of wonder and excitement as they enter from one side and exit from the other. Playing in the tunnel encourages exploration, daring, and self-confidence while maintaining a safe and enjoyable environment.

Hand Walking Element



The hand-walking element strengthens upper body strength and develops coordination and balance in players. By moving using only their hands, players learn to control their movements, improve their motor skills, and strengthen their arms and shoulders. The height effect and the fact that their feet do not touch the ground add an extra dimension of challenge, requiring players to maintain balance and build self-confidence as they tackle a significant physical challenge.

Barrel Slide



The barrel slide provides an exciting and challenging sliding experience, combining movement with a sense of adventure. Sliding in this slide develops players' motor skills and coordination as they move through the tube at varying speeds. The sliding action boosts self-confidence and encourages daring as players face the challenge of fast movement. The slide is a fundamental and important element in any playground and is considered one of the leading and most beloved attractions for players of all ages.

Play Panel

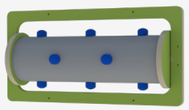

The play panel provides a variety of interactive play options that develop players' motor and cognitive skills. Each panel offers a unique activity that stimulates thinking and encourages players to learn and discover more.

Accessible Stairs



The high-durability stairs provide easy and safe access to the play structure, with a non-slip surface to prevent falls. Climbing and descending the stairs help players develop physical skills such as strength, coordination, and balance. The stairs also encourage independence and self-confidence as players learn to navigate heights and new tasks. Suitable for transfer accessibility to ensure convenient and safe access for players with disabilities, including smooth transitions from a wheelchair to the play structure and back.

Climbing Element



The climbing element offers a physical challenge that develops muscle strength, coordination, and balance. Climbing on the element encourages children to overcome fears and build self-confidence and perseverance. Additionally, the element helps develop problem-solving skills as children look for efficient and safe ways to climb.

Play Panel

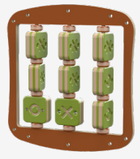

The play panel provides a variety of interactive play options that develop players' motor and cognitive skills. Each panel offers a unique activity that stimulates thinking and encourages players to learn and discover more.

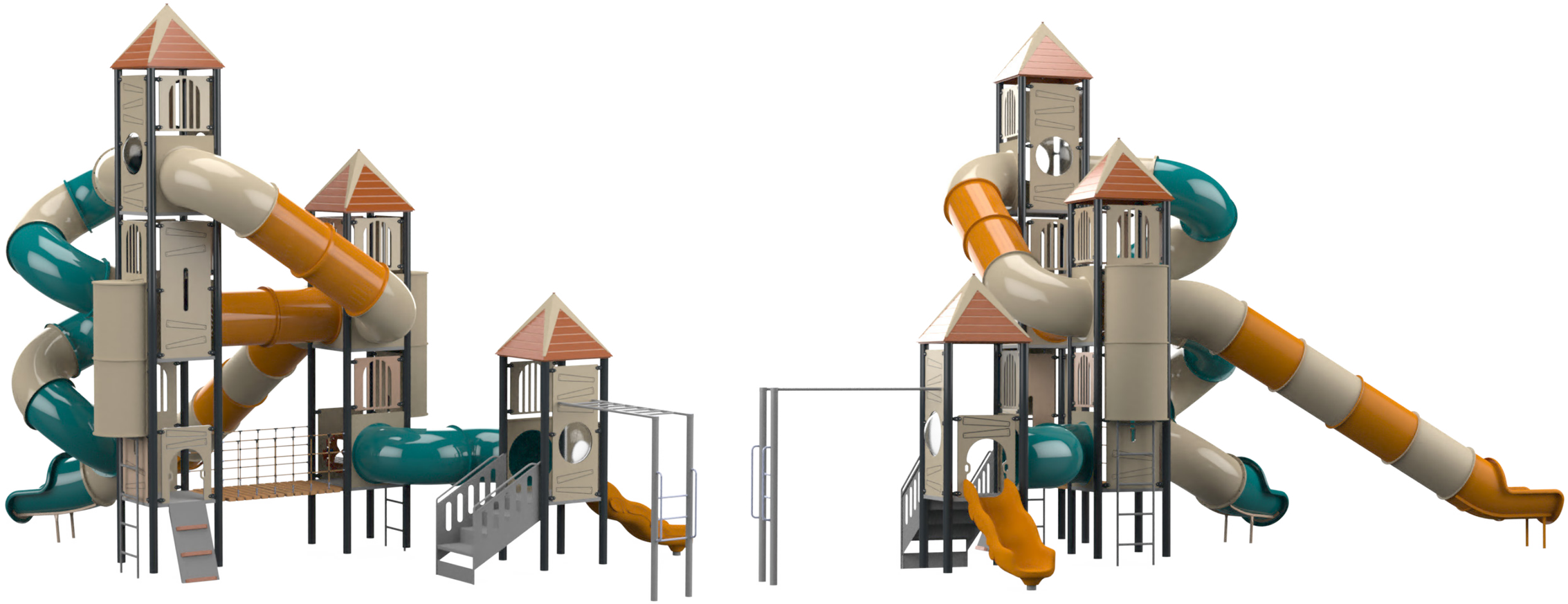

Motor Development

Hand-eye coordination - Developing coordination and precision in activities requiring fine motor skills. Foot-eye coordination - Improving coordination and balance through various equipment.

Cognitive Development

Regulation of force- Developing the ability to apply the right amount of force according to the activity. Curiosity - Encouraging exploration and discovery through equipment providing new and unfamiliar experiences.

Social Development

Empathy- Developing empathy and the ability to understand and empathize with others' feelings. Respect for boundaries- Learning the importance of respecting personal and social boundaries. Friendship creation- Creating friendships and strengthening social bonds.

Physical Development

Climbing - Strengthening arm and leg muscles, developing fitness and endurance Balancing- Improving balance and posture. Sliding - Strengthening leg and arm muscles and improving coordination.

Emotional Development

Courage- Facing fears and new challenges. Confidence- Building self-confidence and belief in one's personal abilities. Independence- Developing independence and the ability to make personal decisions. Resilience- Coping with failure and trying again.