TSP-10634

Little Rock

HDPE inclusive toddler play system model Little Rock

Recycled HDPE:

Steel:

Rope Cables:

Balancing

Crawling

Climbing

Sliding

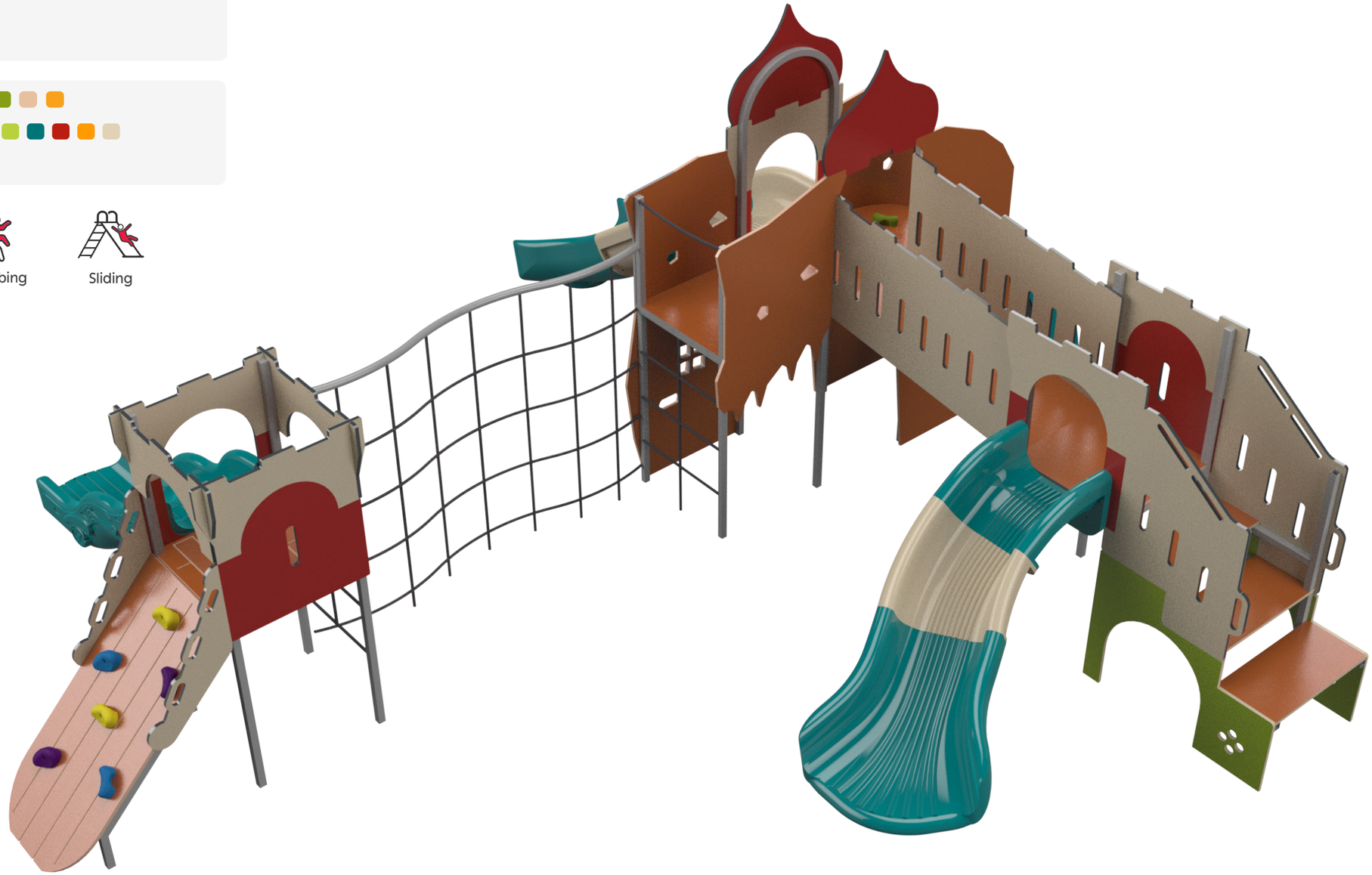

Ages 2-5

Users 42

Dimensions L: 21'-6" W: 20'-6.1" H: 8'-9.2" | cm L: 672 W: 641 H: 274

Safety Zone 34'-0.4"/33' | cm 1036 / 1006

Fall Height 4'-9.6" | 150 cm

Accessible

The Little Rock is a combined play system including high climbing towers and elements for experiential and challenging activity. Encourages curiosity and exploration, independence, spatial orientation, stage planning, and proper organization, and provides many play options for all ages without a sense of exhaustion or loss of interest.



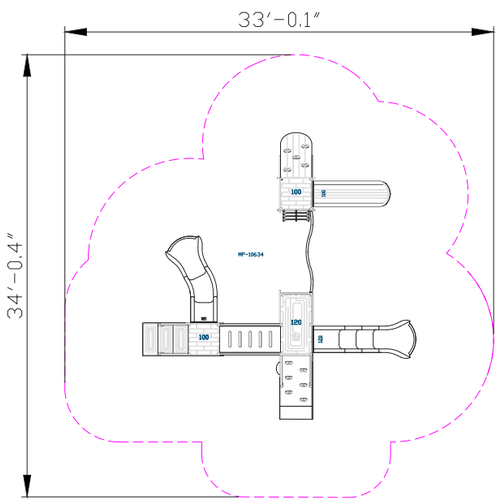

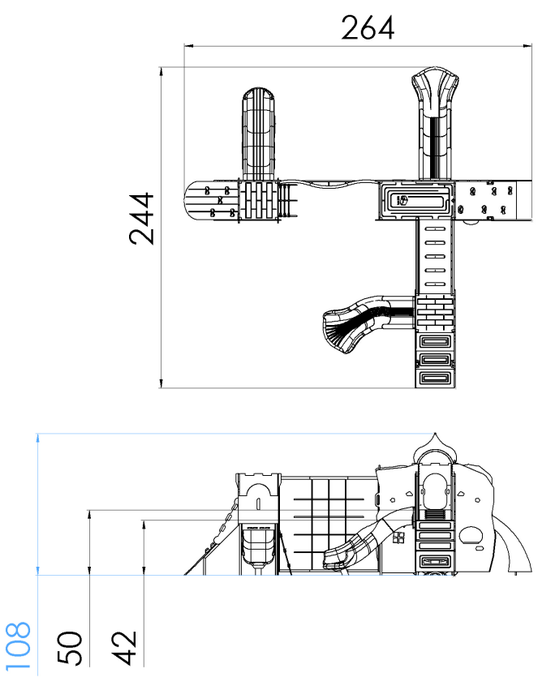



Recycled HDPE

HDPE (High-Density Polyethylene) is a recycled material made from high-density polyethylene, produced from recycled materials that allows for further recycling. It excels in resistance to UV rays and wear and tear, making it particularly suitable for use in outdoor playground equipment. Its touch is smooth and pleasant, and its appearance is maintained over time. The advantages include high resistance to harsh weather conditions and environmental preservation. The material is capable of absorbing high energy, which helps prevent fractures.



Steel

Steel structure that is strong and durable, oven-painted galvanized and coated with lead-free polyester powder for corrosion and rust resistance. The steel meets strict EN 1176 standards, ensuring high quality and safety. The steel is anti-vandalistic, requires minimal maintenance, and is fully recyclable. The high-quality paint ensures weather resistance and maintains a new appearance over time.



Rope Cables

Rope Cables are made of synthetic polypropylene (PP) fibers combined with a galvanized steel core for improved strength and durability. They meet strict standards, such as ASTM A240 and EN 10088, ensuring durability and safety for use in playground equipment. . The cables offer a soft and pleasant touch that does not harm the hands during use and are available in various diameters and colors, allowing for creative and aesthetic design.for creative and aesthetic design.



Climbing Wall

The climbing wall offers a physical challenge that develops the muscle strength, coordination and weight of the players. Climbing the wall improves their problem solving. This is a place where players overcome fears and develop courage and self-confidence.



Rope Ladder

The rope ladder provides vertical access to the play structure and encourages players to develop physical skills such as strength, coordination, and balance. Climbing the rope ladder strengthens hand and leg muscles and develops a sense of balance. The ladder encourages players to face challenges and develop flexibility and agility.



Toddler Slide

The toddler slide provides a safe and enjoyable sliding experience for little ones. It develops coordination, movement, balance, and self-confidence for young players.



Ventilation Window

A ventilation window provides a sense of openness and ventilates the structure, enhancing the play experience and adding an element of enjoyment and freshness. It also allows for maintaining eye contact between the player and companion, strengthening the sense of security.

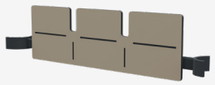

Decorations and Accessories

Decorations and accessories adorn the structures and highlight the theme of the playground. They encourage players to use their imagination and creativity during play.



Accessible Stairs

The high-durability stairs provide easy and safe access to the play structure, with a non-slip surface to prevent falls. Climbing and descending the stairs help players develop physical skills such as strength, coordination, and balance. The stairs also encourage independence and self-confidence as players learn to navigate heights and new tasks. Suitable for transfer accessibility to ensure convenient and safe access for players with disabilities, including smooth transitions from a wheelchair to the play structure and back.



Climbing Wall

The climbing wall offers a physical challenge that develops the muscle strength, coordination and weight of the players. Climbing the wall improves their problem solving. This is a place where players overcome fears and develop courage and self-confidence.



Engravings

Engravings add designs and illustrations to parts of the structure, enriching the play experience with an interesting visual element.

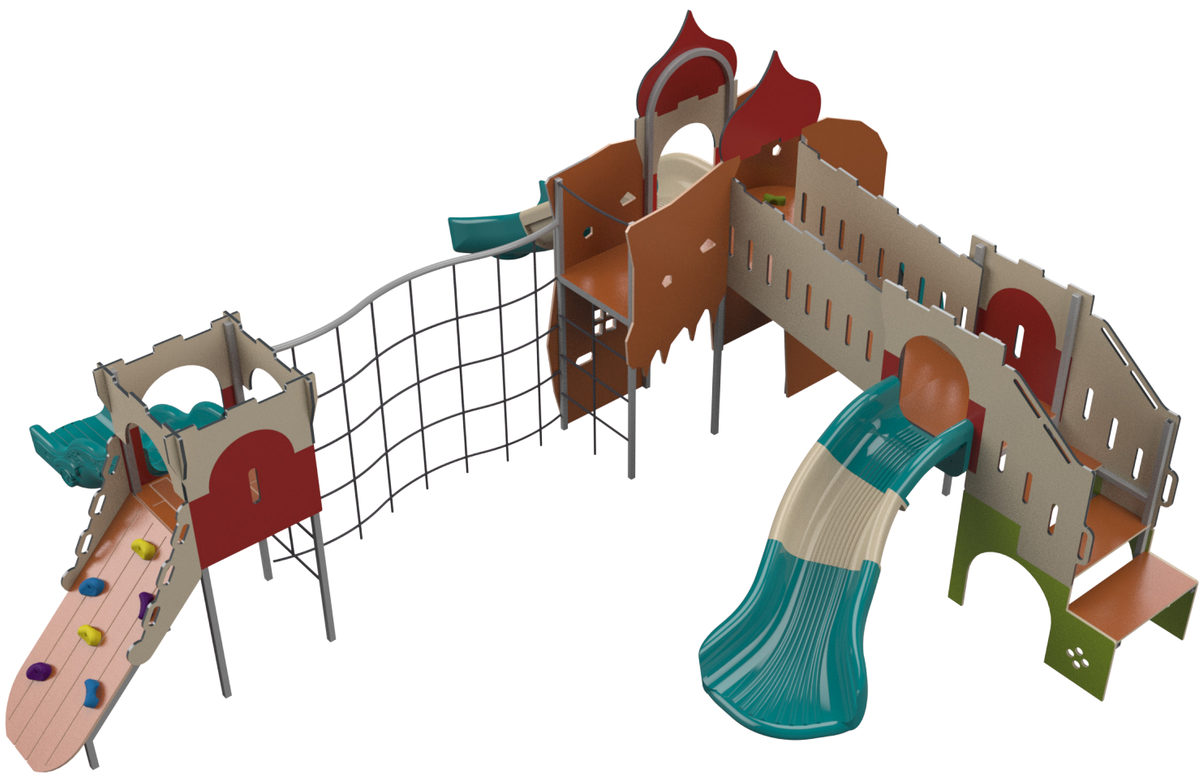



Cognitive Development

Curiosity - Encouraging exploration and discovery through equipment providing new and unfamiliar experiences. Creativity- Developing creative thinking and imagination in .open and interactive play

Emotional Development

Imagination- Encouraging imagination and creating play worlds. Confidence- Building self-confidence and belief in one's personal abilities. Independence- Developing independence and the ability to make .personal decisions

Social Development

Communication- Developing effective and clear communication skills with playmates Conflict resolution- Learning to resolve disputes and manage conflicts positively. Empathy- Developing empathy and the ability to understand and empathize with .others' feelings

Physical Development

Climbing - Strengthening arm and leg muscles, developing fitness and endurance Sliding - Strengthening leg and arm muscles and improving .coordination

Motor Development

Foot-eye coordination - Improving coordination and balance through various equipment. Hand-eye coordination - Developing coordination and precision in activities .requiring fine motor skills

For illustration purposes only ADA

Little Rock TSP-10634 4/4 TM