TSP-10670

Columbia

Play system model Columbia

Recycled HDPE:

Steel:

Rope Cables:

Balancing

Sliding

Climbing

Jumping

Crawling

Hanging



Ages 5-12

Users 65

Dimensions L: 27'-9.3" W: 15' H:17'-1.8" | cm L: 868 W: 469 H: 536

Safety Zone 54'-8.1"/30'-1.9" | 1666 / 916 cm

Fall Height 9'-28" | 290 cm

Accessible

The Columbia is a play system composed of two identical towers. The structure includes two curved tube slides coming out of each tower, bridges connecting the towers, a climbing wall, and stairs for quick and safe climbing. The structure allows children to climb, slide, and explore their environment while engaging in challenging and enjoyable play, combining the development of motor skills and coordination. The design of the structure is intended to encourage cooperation and imaginative play, along with a shared climbing and sliding experience.

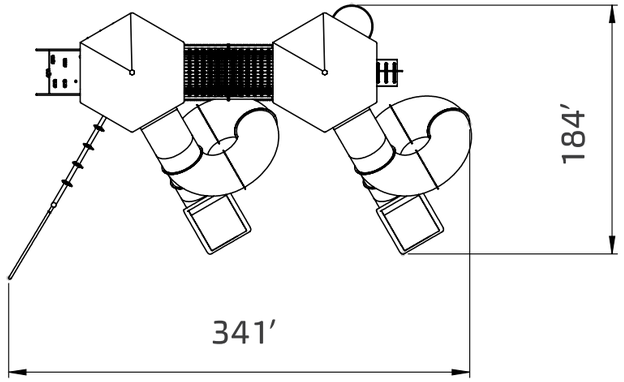

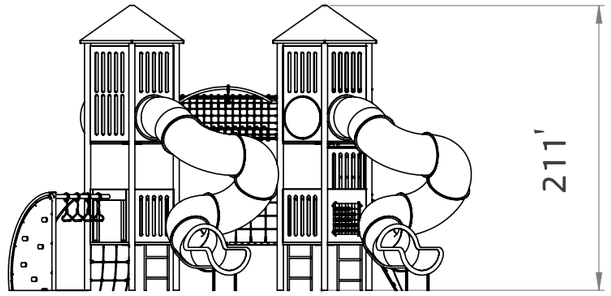





Steel

Steel structure that is strong and durable, oven-painted galvanized and coated with lead-free polyester powder for corrosion and rust resistance. The steel meets strict EN 1176 standards, ensuring high quality and safety. The steel is anti-vandalistic, requires minimal maintenance, and is fully recyclable. The high-quality paint ensures weather resistance and maintains a new appearance over time.



Rope Cables

Rope Cables are made of synthetic polypropylene (PP) fibers combined with a galvanized steel core for improved strength and durability. They meet strict standards, such as ASTM A240 and EN 10088, ensuring durability and safety for use in playground equipment. . The cables offer a soft and pleasant touch that does not harm the hands during use and are available in various diameters and colors, allowing for creative and aesthetic design.for creative and aesthetic design.



Recycled HDPE

HDPE (High-Density Polyethylene) is a recycled material made from high-density polyethylene, produced from recycled materials that allows for further recycling. It excels in resistance to UV rays and wear and tear, making it particularly suitable for use in outdoor playground equipment. Its touch is smooth and pleasant, and its appearance is maintained over time. The advantages include high resistance to harsh weather conditions and environmental preservation. The material is capable of absorbing high energy, which helps prevent fractures.



Climbing Element

The climbing element offers a physical challenge that develops muscle strength, coordination, and balance. Climbing on the element encourages children to overcome fears and build self-confidence and perseverance. Additionally, the element helps develop problem-solving skills as children look for efficient and safe ways to climb.



Clear Bubble

The clear bubble offers a unique vantage point, allowing players to see their surroundings from a different perspective, maintaining eye contact between the companion and the player and ensuring continuous, safe communication. The clear bubble enhances the sense of security for players and companions, especially in cases of young children needing support and supervision during play.



Straight Bridge

The straight bridge allows safe and convenient passage between parts of the structure, developing players' motor skills and balance. The height effect from the ground adds a sense of adventure and challenge as players learn to maintain stability and confidence during the crossing. Playing on the bridge encourages movement and self-confidence.



Climbing Wall

The climbing wall offers a physical challenge that develops the muscle strength, coordination and weight of the players. Climbing the wall improves their problem solving. This is a place where players overcome fears and develop courage and self-confidence.

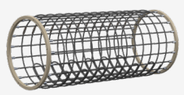

Crawl Bridge

The crawl bridge offers a physical challenge that develops players’ motor skills, coordination, and balance. Positioned at a height, it adds a sense of adventure and excitement. Players crawl through the bridge, enjoying a feeling of wonder and thrill as they enter from one side and emerge from the other. Playing on the bridge encourages movement, exploration, and a sense of achievement.



Rope Ladder

The rope ladder provides vertical access to the play structure and encourages players to develop physical skills such as strength, coordination, and balance. Climbing the rope ladder strengthens hand and leg muscles and develops a sense of balance. The ladder encourages players to face challenges and develop flexibility and agility.



Barrel Slide

The barrel slide provides an exciting and challenging sliding experience, combining movement with a sense of adventure. Sliding in this slide develops players' motor skills and coordination as they move through the tube at varying speeds. The sliding action boosts self-confidence and encourages daring as players face the challenge of fast movement. The slide is a fundamental and important element in any playground and is considered one of the leading and most beloved attractions for players of all ages.

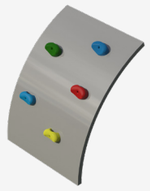

Climbing Element

The climbing element offers a physical challenge that develops muscle strength, coordination, and balance. Climbing on the element encourages children to overcome fears and build self-confidence and perseverance. Additionally, the element helps develop problem-solving skills as children look for efficient and safe ways to climb.





Motor Development

Hand-eye coordination - Developing coordination and precision in activities requiring fine motor skills. Foot-eye coordination - Improving coordination and balance through various equipment.

Cognitive Development

Regulation of force- Developing the ability to apply the right amount of force according to the activity. Curiosity - Encouraging exploration and discovery through equipment providing new and unfamiliar experiences.

Social Development

Empathy- Developing empathy and the ability to understand and empathize with others' feelings. Respect for boundaries- Learning the importance of respecting personal and social boundaries. Friendship creation- Creating friendships and strengthening social bonds.

Physical Development

Climbing - Strengthening arm and leg muscles, developing fitness and endurance Balancing- Improving balance and posture. Sliding - Strengthening leg and arm muscles and improving coordination.

Emotional Development

Courage- Facing fears and new challenges. Confidence- Building self-confidence and belief in one's personal abilities. Independence- Developing independence and the ability to make personal decisions. Resilience- Coping with failure and trying again.